Littelfuse® | Carling Technologies®
A Littelfuse® Brand

F-Series

Hydraulic-Magnetic Circuit Breaker

PRODUCT WEBPAGE

request sample, configure part





Handles High Current
Battery Disconnect for Contingency Power

The F-Series hydraulic-magnetic circuit breaker accommodates current ratings from 100 to 700 amps, as per agency approvals. An optional 25 millivolt metering shunt allows for safely monitoring current output. These breakers are available as a one to three pole configuration with maximum voltage ratings of 277VAC/125VDC and max IC of 50,000 amps.

1-3	100-700	277	125
Poles	Amps	VAC Max	VDC Max

Typical Applications

- Higher Amperage Applications
- Battery Disconnect Systems
- Telecom
- Renewable Energy
- Industrial Automation

Tech Specs

Electrical

Maximum Voltage	125VDC, 277VAC
Current Ratings	Standard current coils: 100, 125, 150, 175, 225, 250 amps. 300, 350, 400, 500, 600, 700 amps available as parallel pole construction.
Auxiliary Switch Rating	SPDT; 10.1 Amps @ 250VAC, 1.0 Amps @ 65VDC, 0.5 Amps @ 80VDC 0.1 Amps @ 125VAC (with gold contacts).
Insulation Resistance	Minimum: 100 Megohms at 500 VDC
Dielectric Strength	1960 VAC, 50/60 Hz for one minute between all electrically isolated terminals, except 2500 VAC for one minute between alarm/aux. switch and main terminals with contacts in open and closed position. F-Series circuit breakers comply with the 8mm spacing & 3750VAC 50/60 Hz dielectric requirements from hazardous voltage to operator accessible surfaces, between adjacent poles and from main circuits to auxiliary circuits per Publications EN 60950 and VDE 0805.
Resistance, Impedance	Values from Line to Load Terminal - based on Series Trip Circuit Breaker.

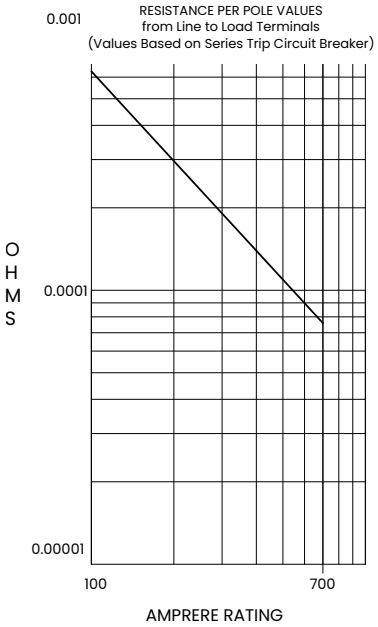

CURRENT (AMPS)	TOLERANCE (%)
100 - 700	50

Mechanical

Endurance	4000 ON-OFF operations with rated Current & Voltage & 4000 operations with no load (8000 operations total) @ 5 per minute. Parallel Pole construction: 1000 operations with rated Current and Voltage @ 5 per minute.
Trip Free	All F-Series Circuit Breakers will trip on overload, even when the actuator is forcibly held in the ON position.
Trip Indication	The operating actuator moves positively to the OFF position when an overload causes the circuit breaker to trip.

Physical

Number of Poles	1-3 Poles Note: Ratings over 250 Amps only available with parallel pole.
Internal Circuit Configuration	Series (with or without auxiliary switch), Switch Only (with or without auxiliary switch).
Available Accessories	Factory installed: DC Current Metering Shunt (25 mV @Ir)
Weight	Varies depending on construction. Consult factory.
Standard Colors	Housing - Black; Actuator- Black or White with contrasting ON-OFF legend.

Environmental

Designed and tested in accordance with requirements of specification MIL-PRF-55629 & MIL-STD-202 as follows:

Shock	Withstands 100 Gs, 6ms, sawtooth while carrying rated current per Method 213, Test Condition "I". Instantaneous and ultra-short curves tested @ 90% of rated current.
Vibration	Withstands 0.060" excursion from 10-55 Hz, and 10 Gs 55-500 Hz, at rated current per Method 204C, Test Condition A. Instantaneous and ultrashort curves tested at 90% of rated current.
Moisture Resistance	Method 106D; ten 24-hour cycles @ + 25°C to +65°C, 80-98% RH.56 days @ +85°C, 85% RH.
Salt Spray	Method 101, Condition A (90-95% RH @ 5% NaCl Solution, 96 hrs)
Thermal Shock	Method 107D, Condition A (Five cycles @ -55°C to +25°C to +85°C to +25°C).
Operating Temperature	-40° C to +85° C

*Manufacturer reserves the right to change product specification without prior notice.

Tech Specs

Tables

Table A: Lists UL Listed (489) and CSA Certified (C22.2 N0. 5.1-M) configurations and performance capabilities as a Molded Case Circuit Breaker

UL489 Listed Branch Circuit Breakers						
Circuit Configuration	Voltage			Current Rating	Interrupting Capacity (Amps)	
	Max Rating	Frequency	Phase	Full Load Amps	UL / CSA 1-3 Poles	TUV [2] 1 or 2 Poles
Series	125	DC	-	50 - 250	50,000	25,000
	120/240 [1]	50/60	1	100 - 250	10,000	-
	277					
	208Y / 120		3			

Notes:
1 120/240V rating available in 2 or 3 poles. In a 3 pole construction the center pole is Neutral.
2 TUV constructions are not available with AC ratings and 150-250 amp ratings only.

Table B: Lists UL Listed configurations and performance capabilities as Circuit Breakers for use in Communications Equipment (Guide DITT, File E189195), under UL489A

UL489 Listed Branch Circuit Breakers				
Circuit Configuration	Voltage		Current Rating	Interrupting Capacity (Amps)
	Max Rating	Frequency	Full Load Amps	Without Backup Fuse
Series	125	DC	251 - 700	50,000

Agency Approvals

UL 489	Circuit Breakers , Molded Case (Guide DIVQ, File E129899) Complies with the requirements of the CSA Standard for Molded Case Circuit Breakers,
UL 489A	CANCSA- C22.2 No. 5.1 –M Circuit Breakers for Use in Communications Equipment (Guide DITT, File E189195)
TUV Certified	IEC 60947-2 Low Voltage Switchgear and Control Gear under TUV License No. R72031058

Time Delay Specs

To view all hydraulic-magnetic circuit breaker time delay values, please visit www.carlingtech.com/sites/default/files/documents/Carling-HM-CB-Time-Delays.pdf

Ordering Scheme

Sample Part Number	F	A	2	-	B	0	-	14	-820	-	1	2	A	-	B	G
Selection	1	2	3		4	5		6	7		8	9	10		11	12

1. SERIES

F

2. ACTUATOR

A	Handle, one per pole
S	Mid-Trip Handle, one per pole
T	Mid-Trip Handle, one per pole & Alarm Switch

3. POLES

1	One	**2**	Two	**3**	Three

4. CIRCUIT [2]

A	Switch Only (no coil) [1]
B	Series Trip (current)
C	Series Trip (voltage) [2]
Parallel Pole Construction:	
M	Series Trip (Current) with Metering Shunt [3,4]
N	Switch Only with Metering Shunt [3,4]
P	Series Trip (Current) [3]
Q	Switch Only [3]

5 AUXILIARY SWITCH [5]

0	without Auxiliary Switch
2	S.P.D.T. 0.110 Q.C. Terminals
4	S.P.D.T. 0.110 Q.C. Terminals (Gold Contacts)
5	S.P.S.T., 0.093 Q.C. Terminals (Gold Contacts)
6	S.P.S.T. 0.110 Q.C. Terminals
7	S.P.S.T. 0.110 Q.C. Terminals (Gold Contacts)
8	S.P.S.T. 0.187 Q.C. Terminals
9	S.P.D.T. 0.187 Q.C. Terminals
A	S.P.S.T., 0.093 Round QC Terminals [6]
B	S.P.D.T., 0.093 Round QC Terminals [6]

6. FREQUENCY & DELAY

03	DC 50/60Hz, Switch Only	**16**	DC Long
10	DC Instantaneous [7]	**22**	AC Short
11	DC Ultra Short	**24**	AC Medium
12	DC Short	**26**	AC Long
14	DC Medium		

7. CURRENT RATING (AMPERES) [4]

CODE	AMPERES	CODE	AMPERES	CODE	AMPERES
810	100.00	**922**	225.00	**845**	450.00 [8]
912	125.00	**825**	250.00	**850**	500.00 [8]
815	150.00	**830**	300.00 [8]	**860**	600.00 [8]
917	175.00	**835**	350.00 [8]	**870**	700.00 [8]
820	200.00	**840**	400.00 [8]		

OR VOLTAGE COIL [7]

CODE	RATING	TRIP VOLTS	CODE	RATING	TRIP VOLTS	CODE	RATING	TRIP VOLTS
A06	6DC	5DC	**A24**	24DC	20DC	**A65**	65DC	55DC
A12	12DC	10DC	**A32**	32DC	25DC	**J06**	6AC	5AC
A18	18DC	15DC	**A48**	48DC	40DC	**B25**	120DC	100DC

8. TERMINAL

Back Connected (Front Mounted Only)		**Max Rating**
1	3/8-16 Stud [9]	250A
2	3/8-16 Screw, Line & Load [14]	700A
5	3/8-16 Short Stud [14]	250A
Front Connected (Back Mounted Only) [11]		**Max Rating**
3	Box Wire Connector, Line & Load	700A
4	3/8-16 Screw, Line & Load [14]	700A

9. ACTUATOR COLOR & LEGEND [12,13]

Actuator Color	I-O	ON-OFF	Dual	Marking Color
White	**A**	**B**	**1**	Black
Black	**C**	**D**	**2**	White

10. MOUNTING

Front Mounting Inserts		Back Mounting Inserts
A	10-32	10-32 screw clearance holes
B	ISO M5	10-32 screw clearance holes

11. MAXIMUM APPLICATION RATING

	VOLTAGE	CURRENT
B	125 VDC	700A
C [15]	120/240	250A
F	277 VAC	250A
7 [16]	120/208 VAC	250A

12. AGENCY APPROVAL

A	No approvals
G	UL489 Listed & cULus
J	UL489 Listed, cULus & TUV Certified to IEC/EN 60934
T	UL489A (Telecom) Listed

Notes:

1. For 100 to 250 amps, select Current Code 825. For 300-400 amps, select Current Code 840. For 450-700 amps, select Current Code 870.
2. Available with Frequency and Delay code 10 or 20 only, and are not rated for continuous duty. Delay 10 and 20 are only available with voltage coils.
3. 3 Codes M, N, P & Q (Parallel Poles) are supplied with factory installed Bus Bar on Line and Load.
4. 4 Metering terminals are female pin type, ref. Molex part number 02-09-1101, model 1189-T.
5. Auxiliary Switch breakers are only available with Series Trip and Switch Only circuits. On multi-pole breakers, one Auxiliary Switch is supplied, mounted in the extreme right pole per figure A. Back-Mounted breakers require special mounting provisions when an Auxiliary Switch is specified.
6. Available with parallel pole construction (circuit codes P and Q, and breakers with circuit codes M and N).
7. Frequency and delay code 10 is only available with Voltage Coils. Voltage Coils are not rated for continuous duty.
8. Ratings over 250 amps are only available with Agency Approval code T (UL489A) and are Parallel Pole configuration (circuit codes M, N, P and Q.) 300-450 amp ratings are available on two pole breakers. 500-700 amp ratings are available on three pole breakers.
9. Per UL requirement, an "Anti-Flash Over Barrier" is supplied between poles on multipole breakers with 3/8 - 16 stud terminals (Terminal Code 1) on AC rated breakers only.
10. Front connected breakers can also be front mounted by utilizing the supplied front panel mounting inserts. Terminal connections must be made before mounting.
11. Box Wire connector will accept #6 through 250 MCM copper wire.
12. Agency codes G & T must have ON-OFF or dual legends. Agency code J must have dual legend.
13. Other colors available. Consult factory.
14. Terminals 2,4 & 5 are shipped without terminal hardware.
15. 2 or 3 Pole Circuit Breaker Required for 120/240 VAC Rating.
16. 3 Pole Circuit Breaker Required for 120/208 VAC Rating.

Configure Complete Part Number > | Browse Standard Parts >

COS-8092 Rev B

*Manufacturer reserves the right to change product specification without prior notice.

Dimensional Specs

inches [millimeters]

SERIES TRIP BACK CONNECT (STUD TERMINALS SHOWN)

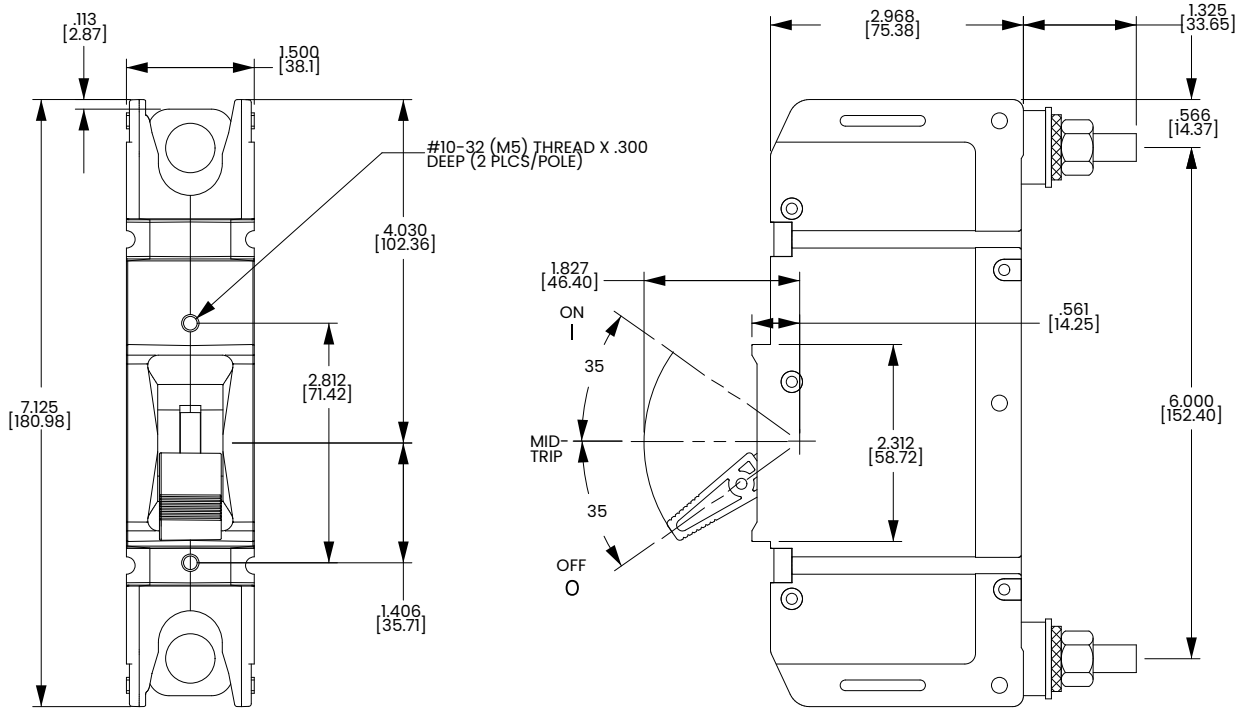

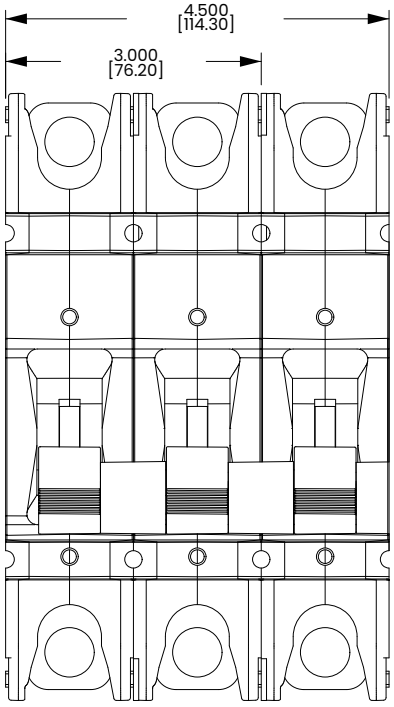

MULTIPOLE SERIES TRIP, SHOWING TERMINAL BARRIER

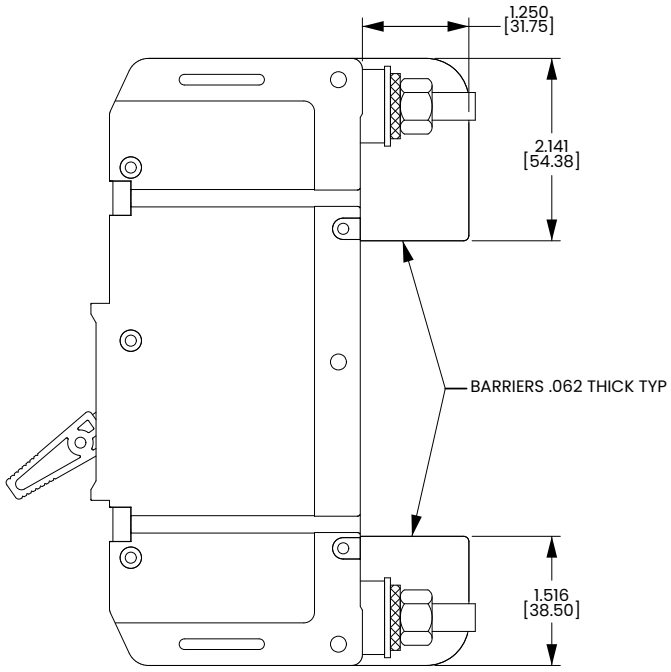

Notes:
1 Tolerance ±.020 [.51] unless otherwise specified.

Dimensional Specs

inches [millimeters]

SERIES TRIP FRONT CONNECT
(BOX LUG TERMINALS SHOWN)

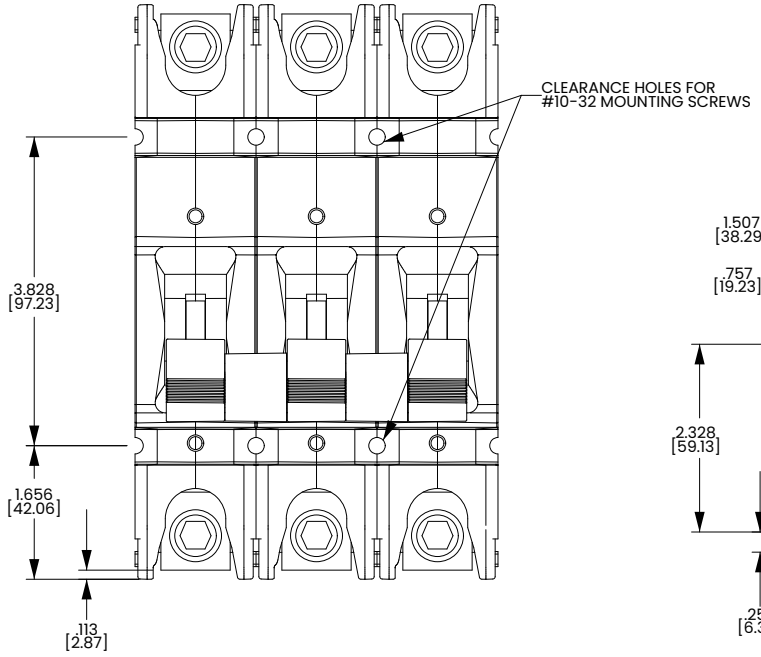

PANEL CUTOUT DETAIL

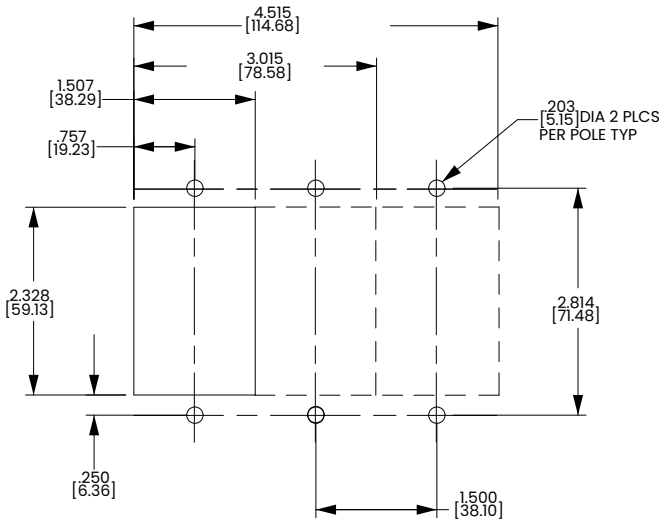

Notes:
1 Tolerance ±.020 [.51] unless otherwise specified.

Dimensional Specs

inches [millimeters]

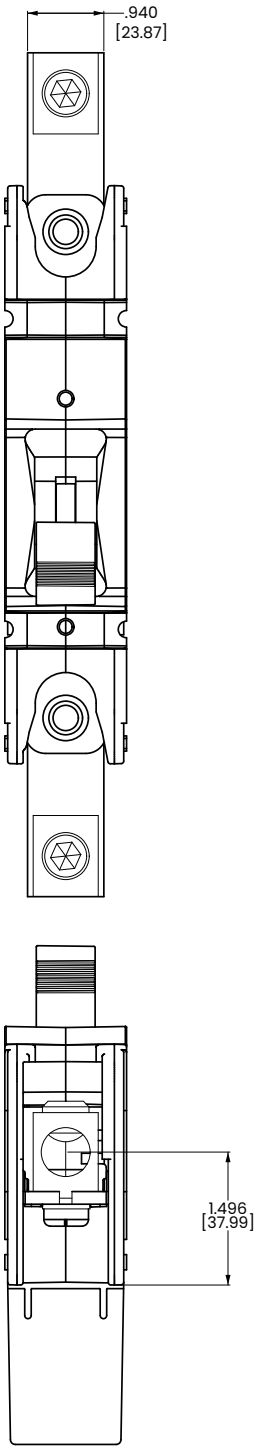

**F-SERIES - 100-250 AMPS
SHOWING METERING
SHUNT AND
BOX LUG CONNECTORS.**

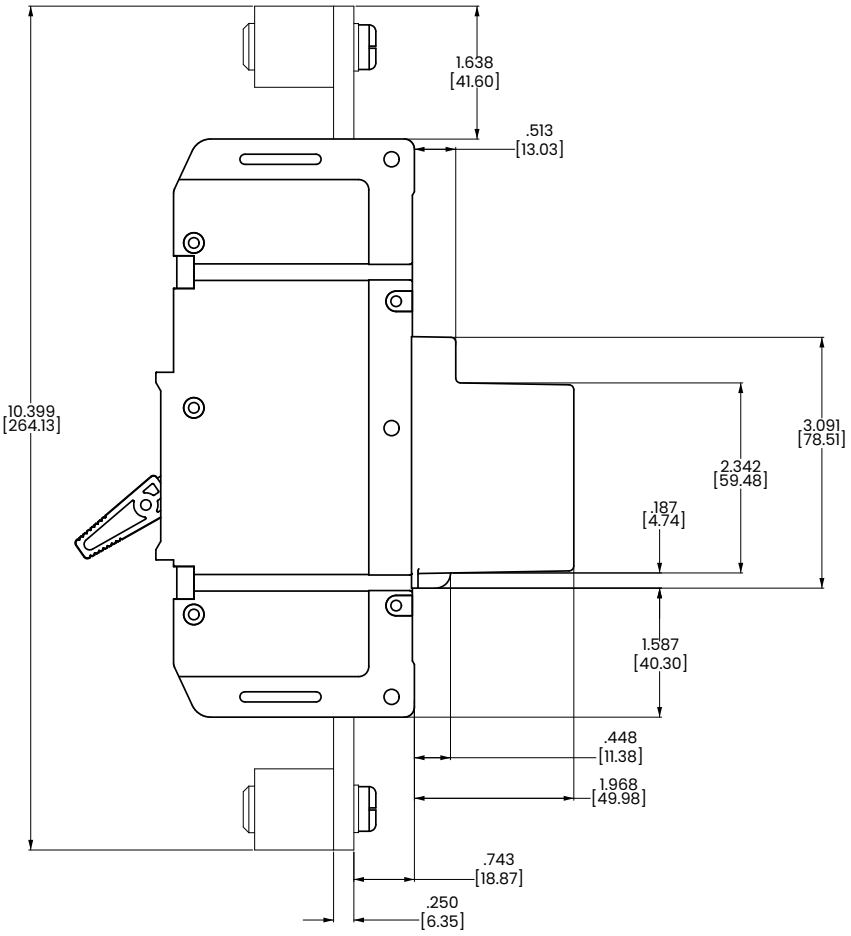

F-Series breakers are available up to 700A, and are also available with a 25 millivolt metering shunt construction. This optional construction provides a safe method for monitoring current flowing through the breaker by simply connecting a meter with light gauge wire to the appropriate terminals located on the shunt housing at the rear of the breaker. You can customize the application by measuring and displaying percentage of current, watts or safe/danger zones.

Notes:
1 Tolerance ±.020 [.51] unless otherwise specified.

Dimensional Specs

inches [millimeters]

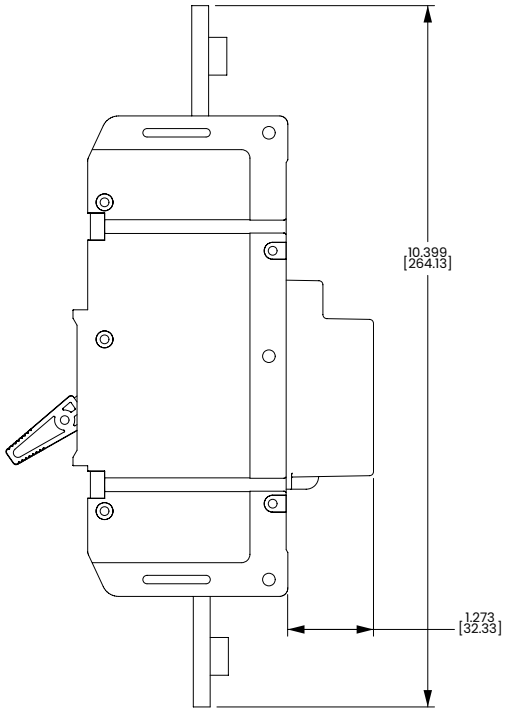

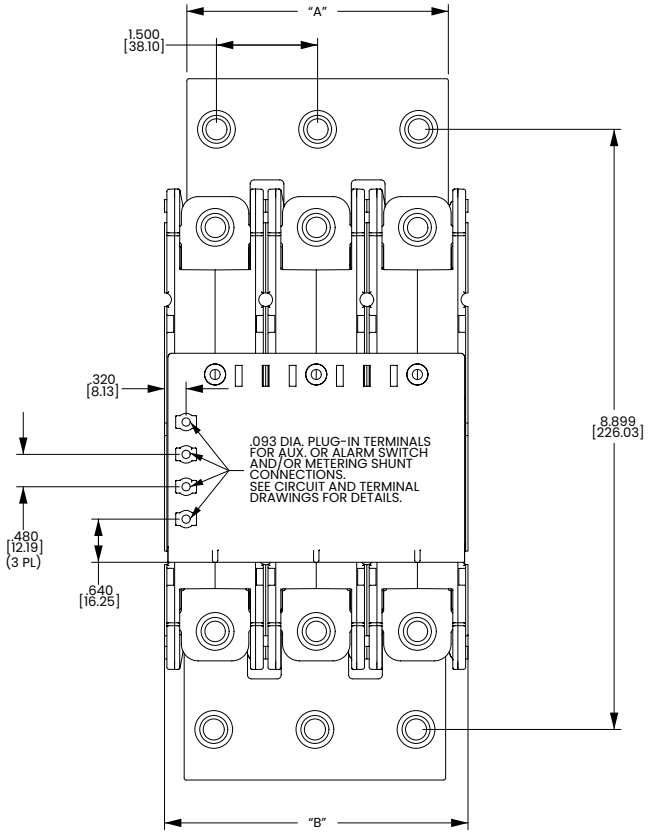

F-SERIES PARALLEL POLE 250-700 AMPS

Notes:
1 Tolerance ±.020 [.51] unless otherwise specified.

Circuit & Terminal Diagram

inches [millimeters]

F-SERIES PARALLEL POLE CONSTRUCTION:

CIRCUIT BREAKER PROFILE	CIRCUIT SCHEMATIC ANSI / IEC	CIRCUIT CODE	AUX SWITCH CODE	CIRCUIT SCHEMATIC ANSI / IEC	CIRCUIT CODE	AUX SWITCH CODE
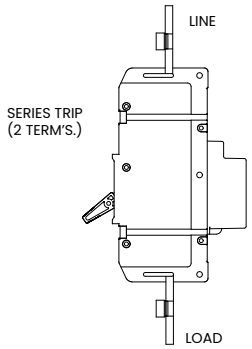	SWITCH ONLY (NO COIL) 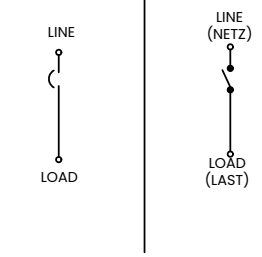	A	0	SERIES TRIP 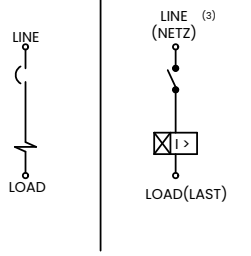	BC	0
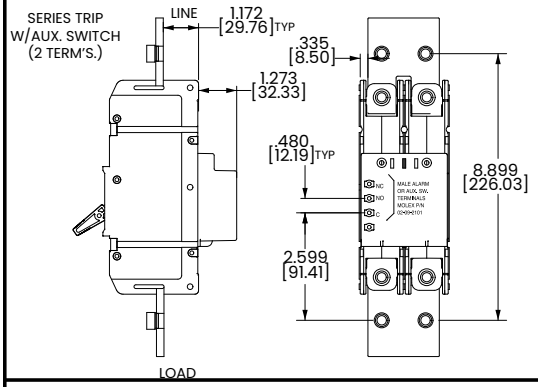	SWITCH ONLY (NO COIL) WITH ALARM OR AUX. SWITCH 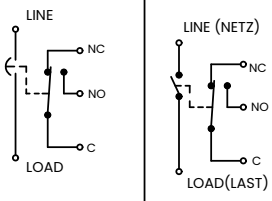	A	B	SERIES TRIP WITH AUXILIARY/ ALARM SWITCH 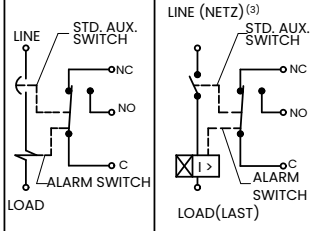	BC	B
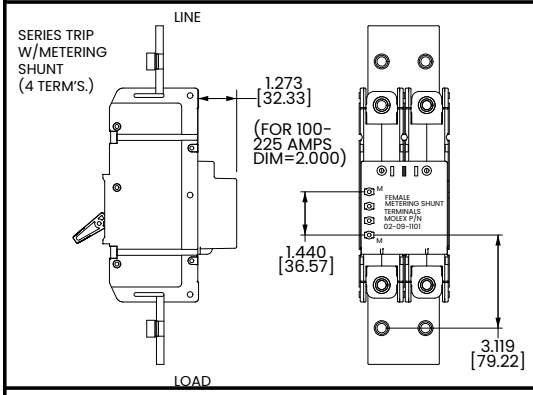	SWITCH ONLY (NO COIL), WITH METERING SHUNT 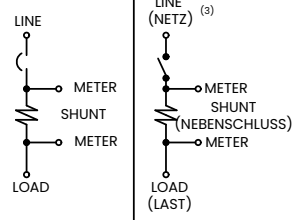	N	0	SERIES TRIP CURRENT COIL, WITH METERING SHUNT 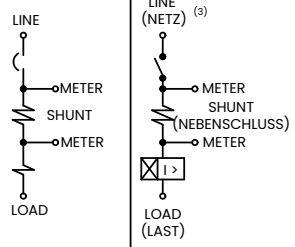	M	0
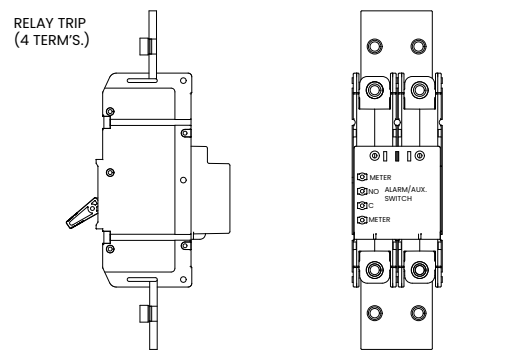	SWITCH ONLY WITH ALARM OR AUX. SWITCH AND METERING SHUNT 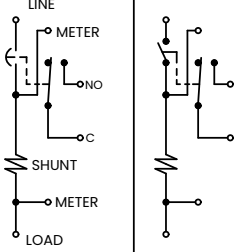	N	A	SERIES TRIP WITH ALARM OR AUX. SWITCH AND METERING SHUNT 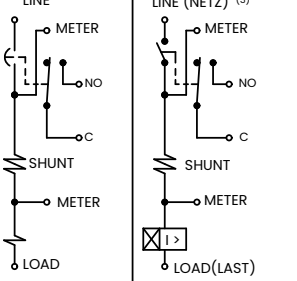	M	A

Notes:
1 Tolerance ±.020 [.51] unless otherwise specified.

Circuit & Terminal Diagram

inches [millimeters]

F-SERIES PARALLEL POLE CONSTRUCTION:

CIRCUIT BREAKER PROFILE	CIRCUIT SCHEMATIC	CIRCUIT CODE	AUX SWITCH CODE	CIRCUIT SCHEMATIC	CIRCUIT CODE	AUX SWITCH CODE
	ANSI / IEC — SWITCH ONLY (NO COIL)			ANSI / IEC — SERIES TRIP		
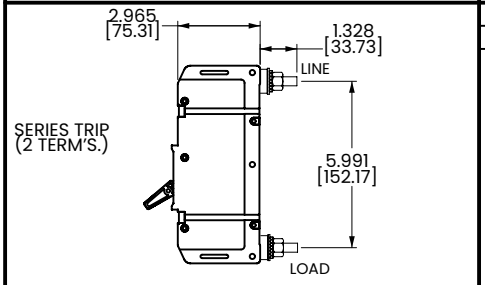	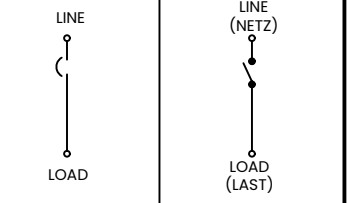	A	0	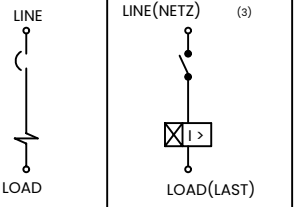	BC	0
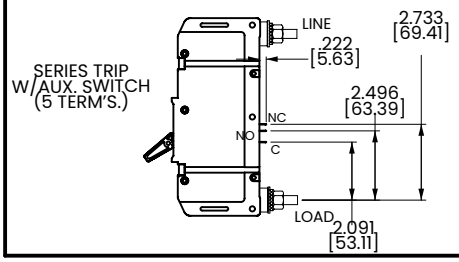	SWITCH ONLY (NO COIL) WITH AUXILIARY SWITCH 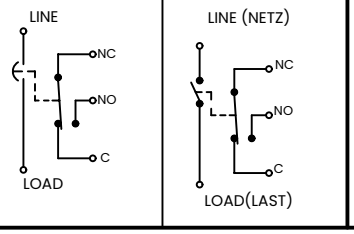	A	2 3 4 5 9	SERIES TRIP WITH AUXILIARY SWITCH 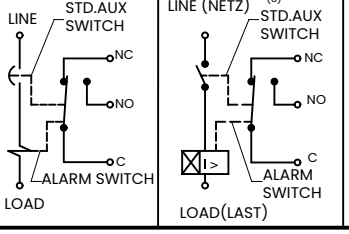	BC	2 3 4 5 9

TERMINAL DETAILS

BACK CONNECT

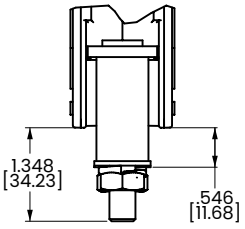

3/8-16 THREADED STUD
CODE 1

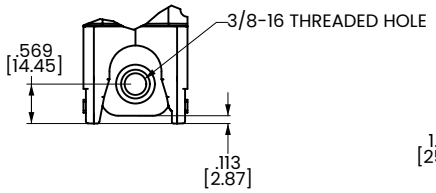

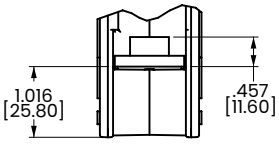

3/8-16 THREADED STUD
CODE 2

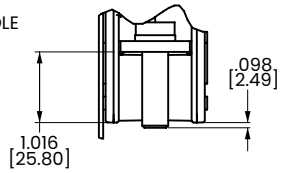

SHORT STUD
CODE 5

FRONT CONNECT

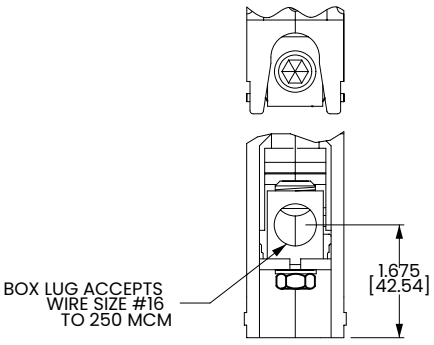

BOX WIRE
CONNECTOR

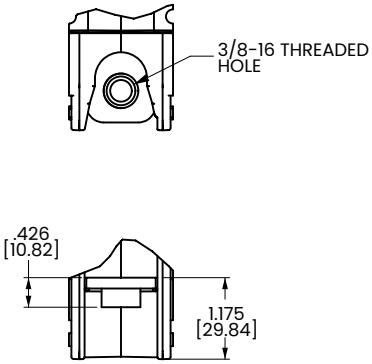

3/8-16 THREADED HOLE
CODE 4

Notes:
1 Tolerance ±.020 [.51] unless otherwise specified.

Time Delay

F-SERIES TIME DELAY VALUES									
	PERCENT OF RATED CURRENT								
	Delay	100%	125%	150%	200%	400%	600%	800%	1000%
TRIP TIME SECONDS	11	No Trip	.013 - .125	.010 - .070	.008 - .032	.006 - .020	.005 - .020	.004 - .020	.004 - .020
	12	No Trip	.475 - 10.0	.275 - 2.80	.140 - .850	.030 - .190	.015 - .125	.010 - .050	.008 - .038
	14	No Trip	10.0 - 110	6.00 - 40.0	2.50 - 15.0	.500 - 3.00	.180 - 1.00	.010 - .280	.008 - .080
	16	No Trip	110 - 1000	60.0 - 400	22.0 - 150	4.00 - 25.0	1.00 - 5.50	.010 - 1.80	.008 - .390
	22	No Trip	0.44 - 10.0	0.25 - 2.80	0.13 - 0.90	0.030 - 0.19	0.015 - 0.125	0.010 - 0.055	0.008 - 0.045
	24	No Trip	7.20 - 110	4.40 - 45.0	2.00 - 18.0	0.25 - 3.50	0.016 - 1.60	0.009 - 0.33	0.008 - 0.11
	26	No Trip	100 - 1100	32.0 - 400	14.0 - 150	2.50 - 25.0	0.020 - 11.0	0.010 - 3.10	0.008 - 0.39

AC

Short - AC 22

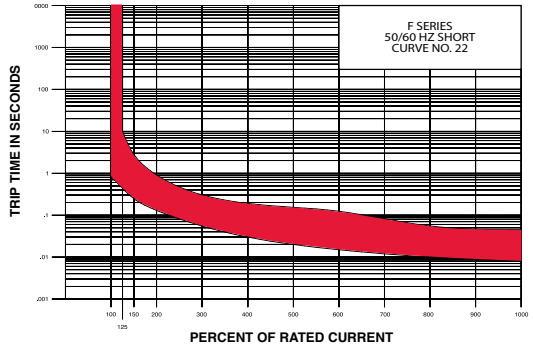

Medium - AC 24

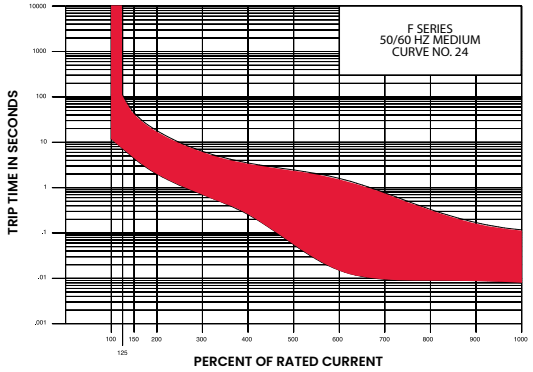

Long - AC 26

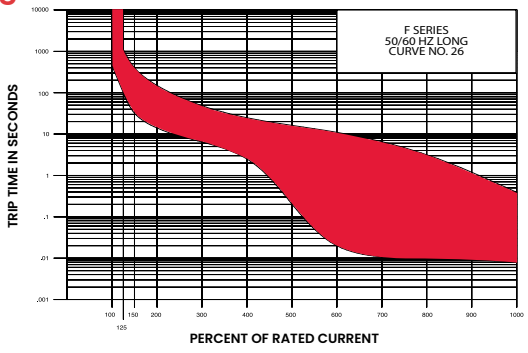

DC

Ultrashort - DC

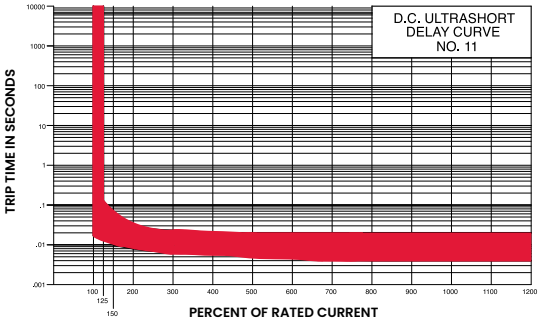

Short - DC

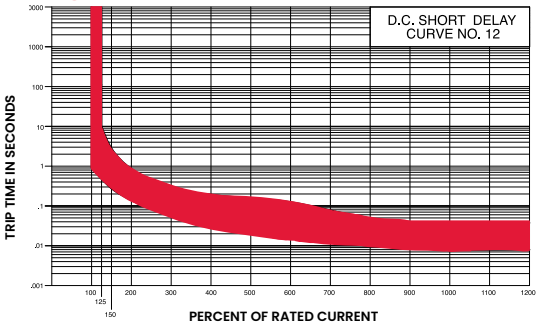

Medium - DC

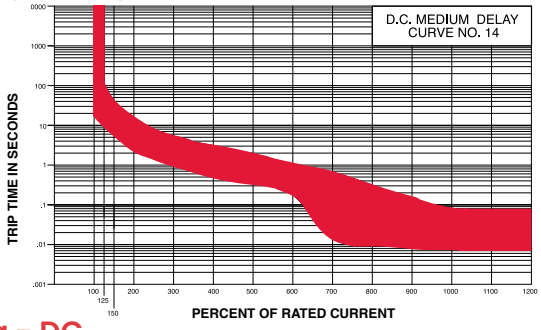

Long - DC

