SMD Sälzer Modular Design

Mounting Form Table

S400
50A up to 63A

Section

Front Mounting Switches	**A**
Base Mounting Switches	**B**

Sälzer Electric GmbH
Clemens-Pfau-Platz 27
09306 Rochlitz
www.saelzer.com

Headquarters:
+49 (0) 37 37 / 87-280
sales@salzer.de

Originator: Sälzer Electric GmbH · Product Data Management (PDM) · 09306 Rochlitz (Germany)
Copyright reserved by Sälzer Electric GmbH. This document replaces all previous issues.
Valid until a new version is published. Changes and revisions reserved.

Mounting form table

Mtg. form		Page
002M1	B1-1	(7)
003M1	A1-1	(4)
013M1	A1-2	(5)
041M1	B1-2	(8)
042M1	B1-3	(9)

SMD Sälzer Modular Design

Section A

	Page from	to
Four hole mounting	**A1-1**	**A1-2**

Originator: Sälzer Electric GmbH · Product Data Management (PDM) · 09306 Rochlitz (Germany)
Copyright reserved by Sälzer Electric GmbH. This document replaces all previous issues.
Valid until a new version is published. Changes and revisions reserved.

Front Mounting Switches

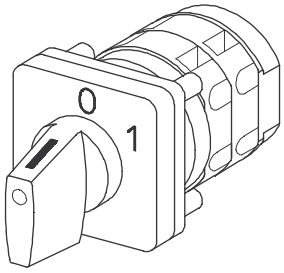

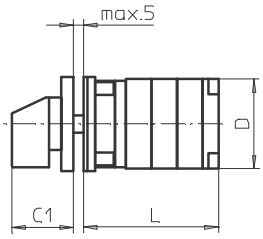

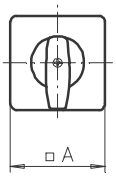

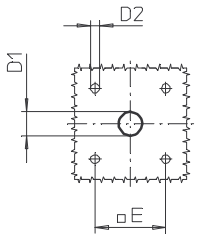

Product line
S400

Front mounting switch

Four hole mounting
48 x 48 mm

003M1 (IP55)

Complete switch	Poles	Product lines	Rated data (IEC 60947) Operational current I_e AC-21A A	Operational power at 380–440 V AC-23A kW	AC-3 kW	Order code number
Rotary Cam Switches	1 ... 24	S400	50	22	22	**S432 - 61 ... - 003M1**
Switching angle 30°/45°/60°/90°			63	30	30	**S440 - 61 ... - 003M1**

SMD modules for basic switch (GA A28)(GA A28)

Mounting form module for 003M1	S400	**BFB4 - 003**
M-operator module 64 x 64 mm, mounting form 003M1 Starting position of the handle 09 h Escutcheon black, handle black		**4DM1**
M-operator module 64 x 64 mm, mounting form 003M1 Starting position of the handle 12 h Escutcheon black, handle black		**4EM1**
Legend plate silver, operator module 003M1		**FAS4 - ....** (FA number)

Dimensions (mm)

Type	A	C1	D	D1	D2	E	L with ... stages (max. 12) 1	2	3	4	5	6	7	each add. stage
S432	64	39	65	12	5	48	51	69	87	105	123	141	159	18
S440	64	39	70	12	5	48	56	77	98	119	140	161	182	21

Front Mounting Switches

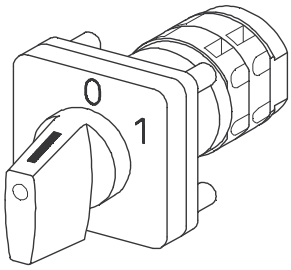

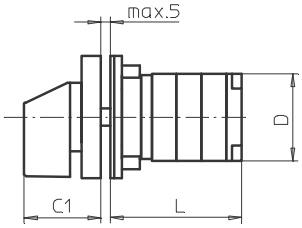

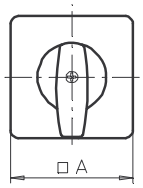

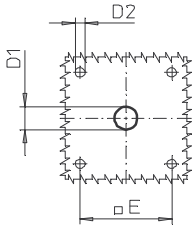

Product line
S400

Front mounting switch
Operator module of next size

Four hole mounting
68 x 68 mm

013M1 (IP55)

Complete switch	Poles	Product lines	Rated data (IEC 60947) Operational current I_e AC-21A A	Operational power at 380–440 V AC-23A kW	AC-3 kW	Order code number
Rotary Cam Switches	1 ... 24	S400	50	22	22	**S432 - 61 ... - 013M1**
Switching angle 30°/45°/60°/90°			63	30	30	**S440 - 61 ... - 013M1**

SMD modules for basic switch (GA A28)

Mounting form module for 013M1	S400	**BFB4 - 013**
M-operator module 88 x 88 mm, mounting form 013M1 Starting position of the handle 09 h Escutcheon black, handle black		**6AM1**
M-operator module 88 x 88 mm, mounting form 013M1 Starting position of the handle 12 h Escutcheon black, handle black		**6BM1**
Legend plate silver, operator module 013M1		**FAS6 - ....** (FA number)

Dimensions (mm)

Type	A	C1	D	D1	D2	E	L with ... stages (max. 12) 1	2	3	4	5	6	7	each add. stage
S432	88	52	65	15	5,5	68	51	69	87	105	123	141	159	18
S440	88	52	70	15	5,5	68	56	77	98	119	140	161	182	21

SMD Sälzer Modular Design

Section B

	Page from	to
Four hole mounting	**B1-1**	**B1-3**

Base Mounting Switches

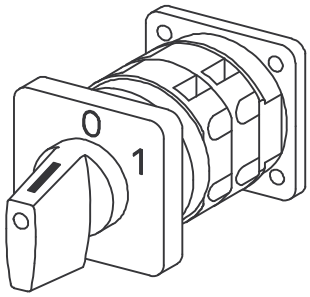

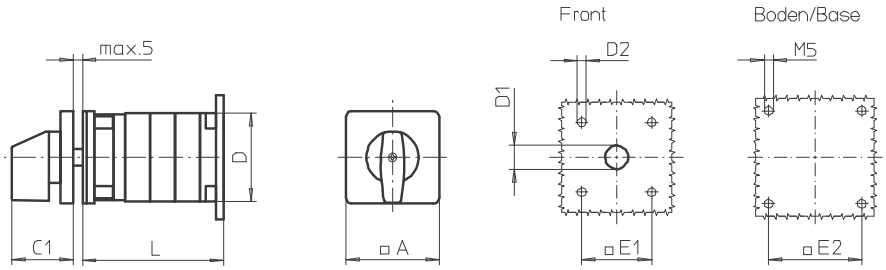

Product line
S400

Base mounting switch

Base/front mounting

Four hole mounting
48 x 48 mm front
68 x 68 mm base

002M1

Complete switch	Poles	Product lines	Rated data (IEC 60947) Operational current I_e AC-21A A	Operational power at 380–440 V AC-23A kW	AC-3 kW	Order code number
Rotary Cam Switches Switching angle 30°/45°/60°/90°	1 ... 24	S400	50 63	22 30	22 30	**S432 - 61 ... - 002M1** **S440 - 61 ... - 002M1**

SMD modules for basic switch (GA A28)

Mounting form module for 002M1	S400	**BFA4 - 002**
M-operator module 64 x 64 mm, mounting form 002M1 Starting position of the handle 09h Escutcheon black, handle black		**4DM1**
M-operator module 64 x 64 mm, mounting form 002M1 Starting position of the handle 12h Escutcheon black, handle black		**4EM1**
Legend plate silver, operator module 002M1		**FAS4 - ....** (FA number)

Dimensions (mm)

Type	A	C1	D	D1	D2	E1	E2	L with ... stages (max. 12) 1	2	3	4	5	6	each add. stage
S432	64	39	65	12	5	48	68	56	74	92	110	128	146	18
S440	64	39	70	12	5	48	68	61	82	103	124	145	166	21

Base Mounting Switches

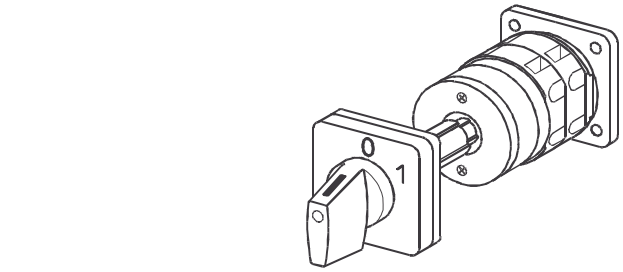

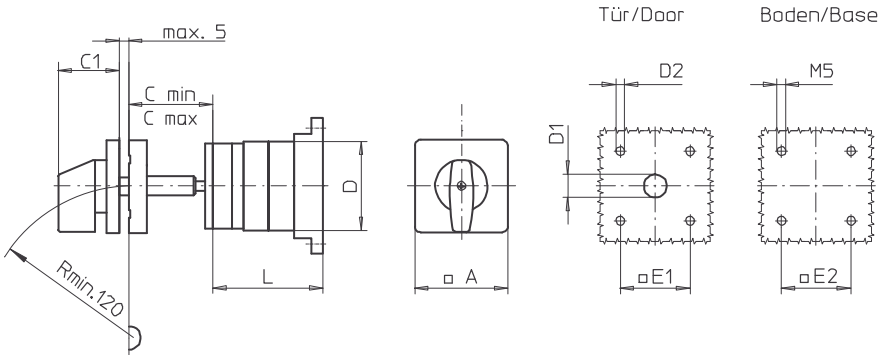

Product line
S400

Base mounting switch

Door clutch

Four hole mounting
48 x 48 mm front
68 x 68 mm base

041M1 (IP55)

Complete switch	Poles	Product lines	Rated data (IEC 60947) Operational current I_e AC-21A A	Operational power at 380–440 V AC-23A kW	AC-3 kW	Order code number
Rotary Cam Switches Switching angle 30°/45°/60°/90°	1 ... 24	S400	50 63	22 30	22 30	**S432 - 61 ... - 041M1** **S440 - 61 ... - 041M1**

SMD modules for basic switch (GA A28)

Mounting form module for 041M1	S400	**BFA4-041**
M-operator module 64 x 64 mm, mounting form 041M1 Starting position of the handle 09 h Escutcheon black, handle black		**4DM1**
M-operator module 64 x 64 mm, mounting form 041M1 Starting position of the handle 12 h Escutcheon black, handle black		**4EM1**
Legend plate silver, operator module 041M1		**FAS4 - ....** (FA number)

Dimensions (mm)

Type	A	C_{min}	C_{max}	C1	D	D1	D2	E1	E2	L with ... stages (max. 12) 1	2	3	each add. stage
S432	64	42	56	39	65	15	5	48	68	51	69	87	18
S440	64	42	56	39	70	15	5	48	68	56	77	98	21

Base Mounting Switches

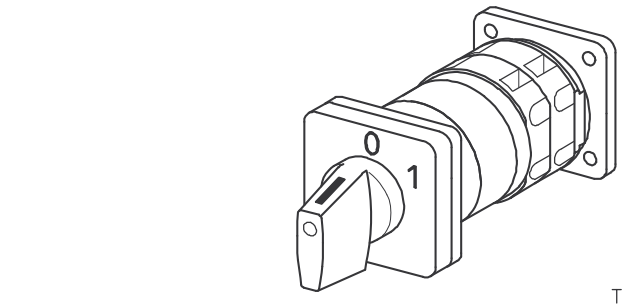

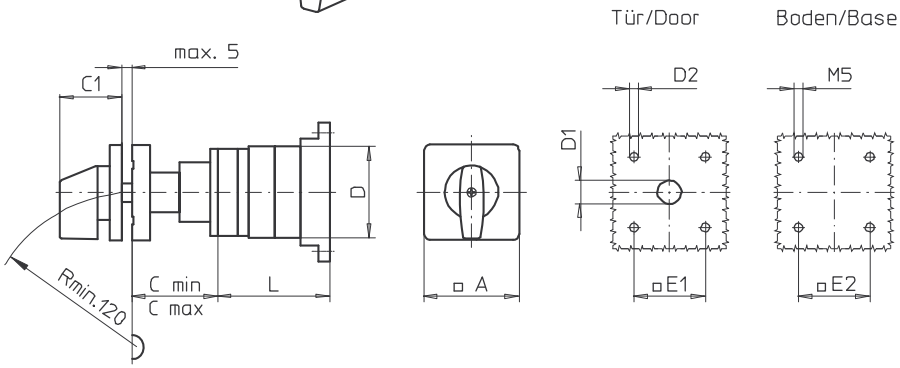

Product line
S400

Base mounting switch

Door interlock

Four hole mounting
48 x 48 mm front
68 x 68 mm base

042M1 (IP55)

Complete switch	Poles	Product lines	Rated data (IEC 60947) Operational current I_e AC-21A A	Operational power at 380–440 V AC-23A kW	AC-3 kW	Order code number
Rotary Cam Switches Switching angle 30°/45°/60°/90°	1 ... 24	S400	50 63	22 30	22 30	**S432 - 61 ... - 042M1** **S440 - 61 ... - 042M1**

SMD modules for basic switch (GA A28) (GA A28)

Mounting form module for 042M1	S400	**BFA4-042**
M-operator module 64 x 64 mm, mounting form 042M1 Starting position of the handle 09 h Escutcheon black, handle black		**4DM1**
M-operator module 64 x 64 mm, mounting form 042M1 Starting position of the handle 12 h Escutcheon black, handle black		**4EM1**
Legend plate silver, operator module 042M1		**FAS4 - ....** (FA number)

Dimensions (mm)

Type	A	C_{min}	C_{max}	C1	D	D1	D2	E1	E2	L with ... stages (max. 12) 1	2	3	each add. stage
S432	64	42	56	39	65	15	5	48	68	51	69	87	18
S440	64	42	56	39	70	15	5	48	68	56	77	98	21

SMD Sälzer Modular Design

Faster deliveries through SMD

In order to ensure even greater flexibility for worldwide supply availability within 24h, Sälzer Electric has introduced the SMD (Sälzer Modular Design) system.

SMD modules are individually prefabricated and tested all-in-one modules which SMD Service holds in stock in sufficient quantities. From basic switch modules, mounting form modules and operator modules, SMD Service can assemble a complete switch requested by the customer and pack it ready for delivery in just a few actions.

– back –