Type LA Shunt

Base Mounted Shunt

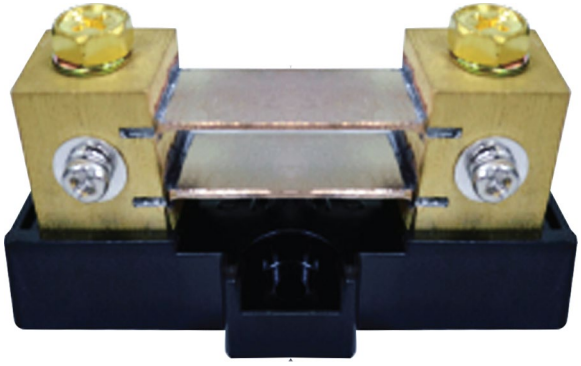

TYPE LA 50 mV	TYPE LA 100 mV
LA-5ADC-50MVDC	LA-10ADC-100MVDC
LA-10ADC-50MVDC	LA-15ADC-100MVDC
LA-15ADC-50MVDC	LA-20ADC-100MVDC
LA-20ADC-50MVDC	LA-30ADC-100MVDC
LA-25ADC-50MVDC	LA-50ADC-100MVDC
LA-30ADC-50MVDC	LA-100ADC-100MVDC
LA-40ADC-50MVDC	
LA-50ADC-50MVDC	
LA-60ADC-50MVDC	
LA-75ADC-50MVDC	
LA-80ADC-50MVDC	
LA-100ADC-50MVDC	
LA-125ADC-50MVDC	
LA-150ADC-50MVDC	

Specifications

- Accuracy of +/-.25%.
- Current rating 5A to 200A.
- 50mV or 100mV or custom output.
- 1/4 UNF brass studs hex jam nut.
- M3 screws provide wire terminal connection.
- Weight: depends on specifications.

Dimensions

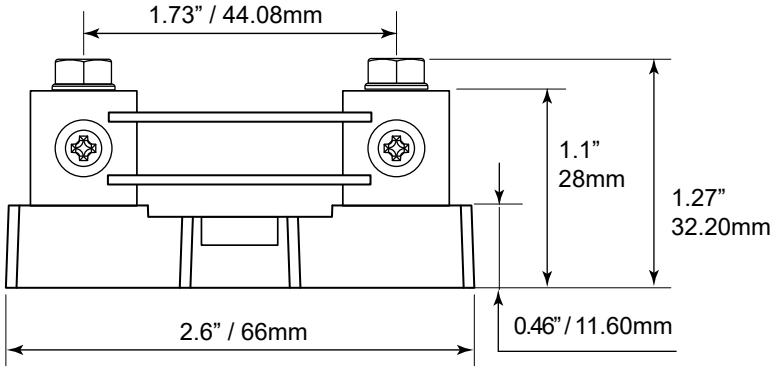

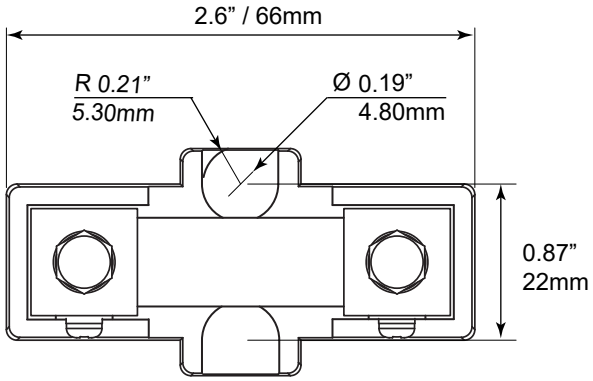

Dimensions subject to change without notice.

Tolerances ± 0.15 for the hole diameters. Other tolerances ± 0.30 unless specified.

Hoyt Electrical Instrument Works, Inc.
23 Meter Street
Penacook, NH 03303

Phone: (800) 258-3652
Fax: (603) 753-9592
Email: sales@hoytmeter.com

www.hoytmeter.com