Type LB Shunt

Base Mounted Shunt



TYPE LB: 170 through 600 Amperes

Specifications

- Current rating 170A to 600A.
- 50mV or 100mV or custom output.
- Accuracy: +/- .25%.
- 3/8-16 x 5/8 Brass Connections with Lock Washers.
- 8-32 Screws provide wire terminal connection.

TYPE LB 50 mV	TYPE LB 100 mV
LB-170ADC-50MVDC	LB-170ADC-100MVDC
LB-200ADC-50MVDC	LB-200ADC-100MVDC
LB-250ADC-50MVDC	LB-250ADC-100MVDC
LB-300ADC-50MVDC	LB-300ADC-100MVDC
LB-400ADC-50MVDC	LB-400ADC-100MVDC
LB-450ADC-50MVDC	LB-450ADC-100MVDC
LB-500ADC-50MVDC	LB-500ADC-100MVDC
LB-600ADC-50MVDC	LB-600ADC-100MVDC

Dimensions

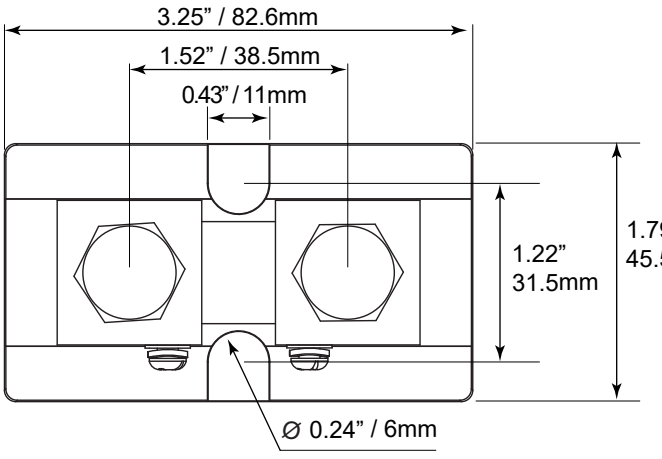

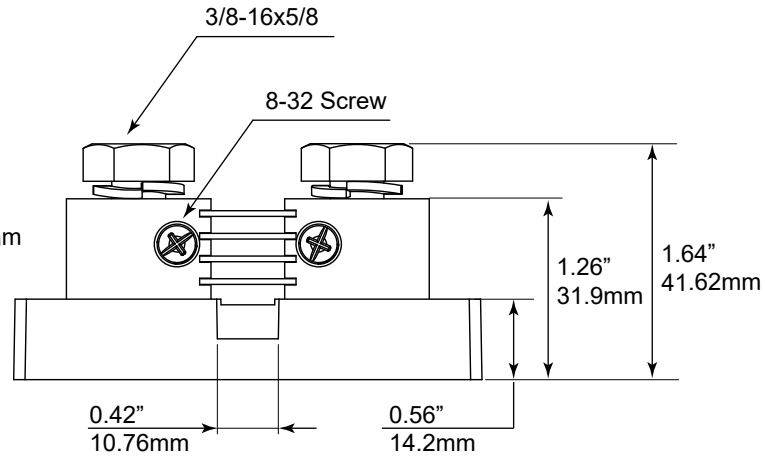

Dimensions subject to change without notice.

Tolerances ±0.15 for the hole diameter. Other tolerances ±0.30 unless specified

Hoyt Electrical Instrument Works, Inc.
23 Meter Street
Penacook, NH 03303

Phone: (800) 258-3652
Fax: (603) 753-9592
Email: sales@hoytmeter.com

www.hoytmeter.com