M2 OLED Digital Meters

The M2 Organic LED Digital Monitor measures essential electrical system parameters with adjustable alarms

- Auto-dimming, bright Organic LED display is easy to read
- 80dB alarm on all models
- Isolated 500mA MOSFET relay
- Includes external DC Shunt or AC Current Transformer when required

5 YEAR WARRANTY



1830

Display Size	55mm x 28mm
Power Supply Voltage	7V–70V DC*
Range (Power Consumption)	0.3W–1.0W
Regulatory	Monitor face is IP66 - protected against powerful water jet when installed according to instructions

Related Products

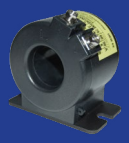
AC Current Transformer


Temperature Sensor


ML-Series Remote Battery Switches


Floyd Bell Turbo Series Alarm


DC Shunts


M2 VSM

Relentlessly Reliable™

NAVICO GROUP

Specs

AC Meters





Part #	1836	1837	1838
Description	Ammeter	Voltmeter	Multimeter
Functions	Monitors current on two circuits	Monitors voltage on two circuits or both legs of 120/240V	Monitors voltage, current, frequency, and power on two circuits or both legs of 120/240V
Voltage			
Accuracy	--	± 1.0%	± 1.0%
Operating	7V–70V DC	7V–70V DC	7V–70V DC
Range	--	50V–250V AC (RMS)	50V–250V AC (RMS)
Resolution	--	1V AC	1V AC
Current			
Current Transformer	1 x Part # 8256 (150A/50mA)	--	1 x Part # 8256 (150A/50mA)
Accuracy	± 2.0%	--	± 2.0%
Range	0A–150A (300A optional)†	--	0A–150A (300A optional)†
Resolution (100 to 150)	1A	--	1A
Resolution (0.0 to 99.9)	0.1A	--	0.1A
Frequency			
Range	--	--	40Hz–90Hz
Resolution	--	--	1 Hz
Power			
Range	--	--	0W–45kW
Resolution (0W–9990W)	--	--	10W
Resolution (10kW–45kW)	--	--	0.1kW
Alarm/Relay Activation	High Current	High and Low Voltage	High and Low Voltage, Current

† Will achieve 300A with an optional current transformer Part # 1829

DC Meters





Part #	1830	1832	1833
Description	Multimeter w/SoC	Ammeter	Voltmeter
Functions	Monitors state-of-charge on one battery bank and voltage on three battery banks	Monitors current on two circuits	Monitors the voltage on up to four battery banks
Voltages	12V, 24V, 36, 48V	--	--
Accuracy	± 1.0%	--	± 1.0%
Operating	7V–70V DC	--	7V–70V DC
Resolution	0.01V DC	--	0.01V DC
Current			
Shunt	1 x Part # 8255 (500A/50mV)	1 x Part # 8255 (500A/50mV)	--
Accuracy	± 1.0%	± 1.0%	--
Range	–500A to 500A	–500A to 500A	--
Resolution (100 to 500)	1A	1A	--
Resolution (99.9 to 500)	0.1A	0.1A	--
Alarm/Relay Activation	High and Low Voltage, High Current,and Low Battery	High Current,	High and Low Voltage

Specifications subject to change. See bluesea.com for current information.

Tank & Bilge Meters




Part #	1839	1842
Description	Tank	Bilge
Functions	Monitors up to 4 tanks	Monitors up to 4 bilges
Operating	7V–70V DC	7V–70V DC
Senders	North American, 240Ω–33Ω European, 10Ω–180Ω Blue Sea Systems Ultrasonic (1810, 1811) Custom Ranges to 300Ω	Float switch or pumps with bilge active outputs. Not compatible with "fully automatic bilge pumps"
Alarm/Relay Activation	High and Low Level	Run time/hr Cycles/24 hr Average Cycles
Other	Custom tanks shapes Auto calibration	Cycle Counter

M2 OLED Mounting Options


Surface mount


Flat panel mount


1525 (meter not included)

Part #	Description	Width in (mm)	Height in (mm)
1525	360 Blank Panel - M2 OLED	4.88 (123.83)	4.75 (120.65)

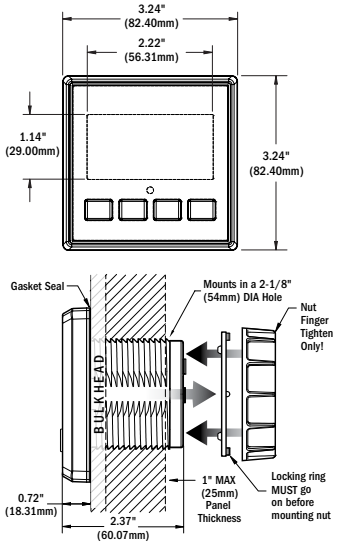

bluesea.com 800.307.6702 980018840 Rev. 005
N85 W12545 Westbrook Crossing, Menomonee Falls, WI 53051

©2025 Blue Sea Systems. All rights reserved.