System wiring example

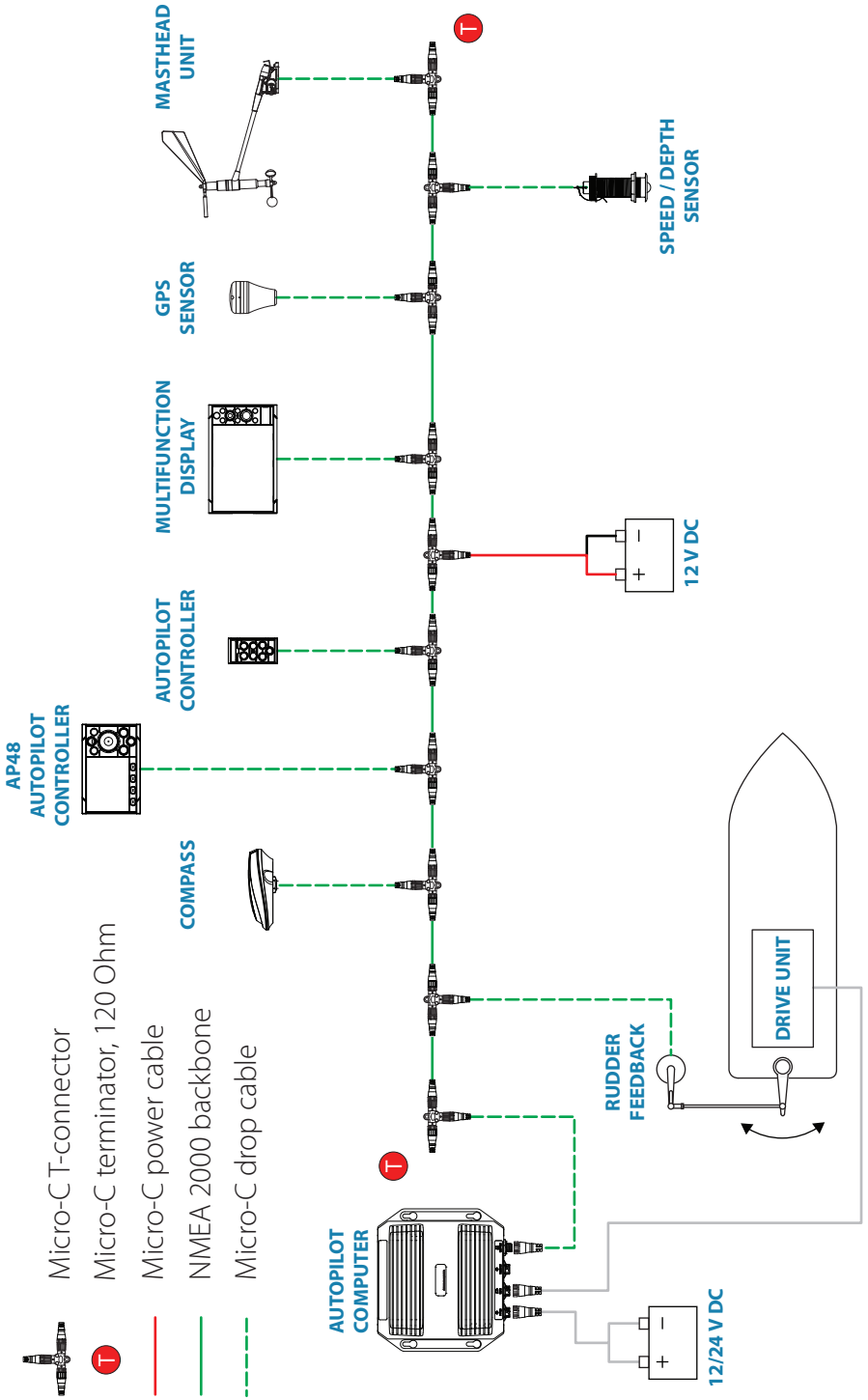

SIMRAD

AP48
INSTALLATION GUIDE

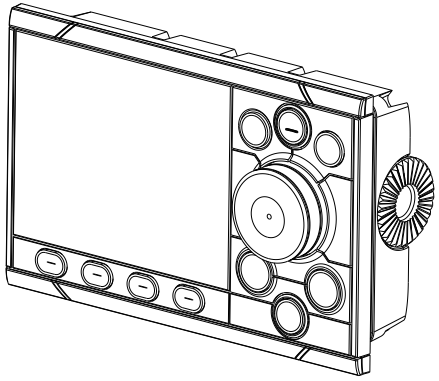

For product manuals, technical specifications, certificates and declarations refer to the product website:

www.simrad-yachting.com

988-11614-001

Parts

1. Display unit and removable bezels

2. Micro-C drop cable - 4.5 m (15')

3. Micro-C T-connector

4. Panel mounting kit

5. Suncover

6. Documentation pack

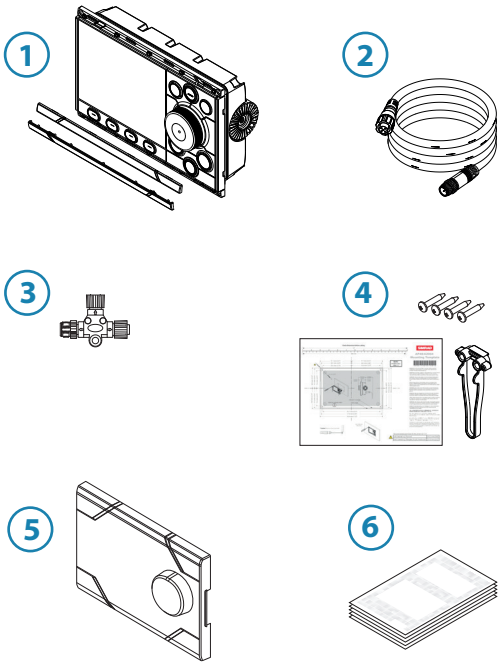

Dimensions

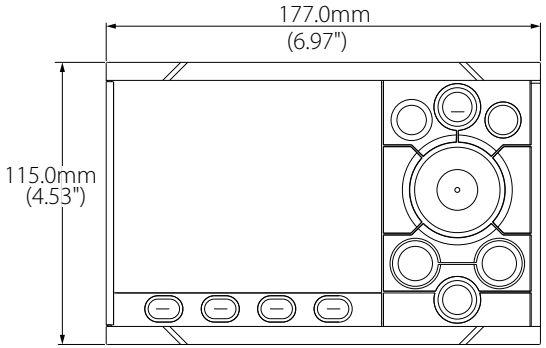

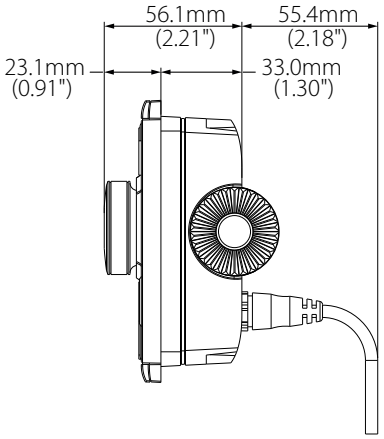

= IPX7 -25°C to +65°C -13°F to +149 °F

Mounting

1

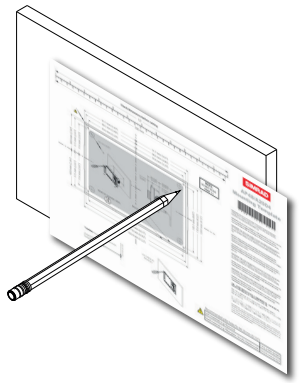

2

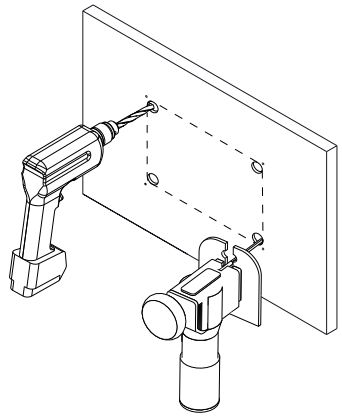

3

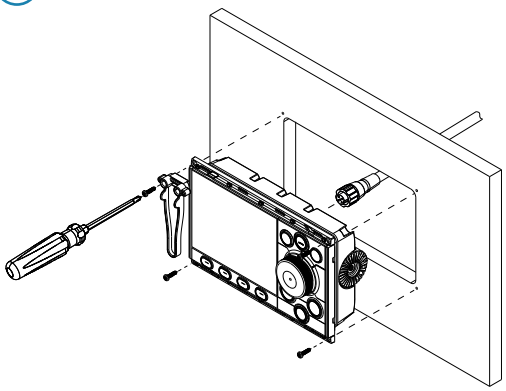

4

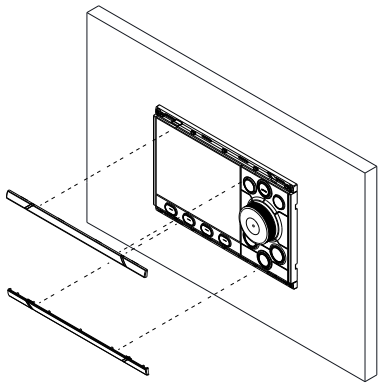

Dimensions with bracket (sold separately)

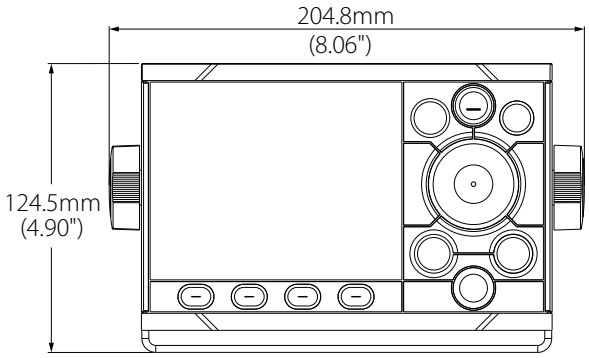

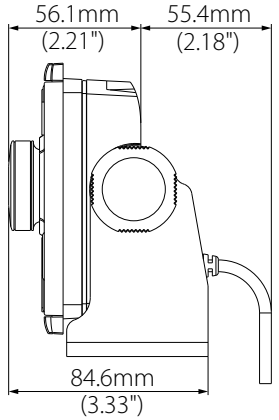

= IPX7 -25°C to +65°C -13°F to +149 °F

Mounting

1

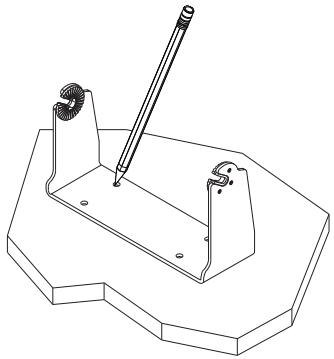

2

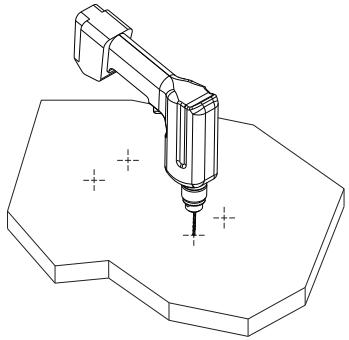

3

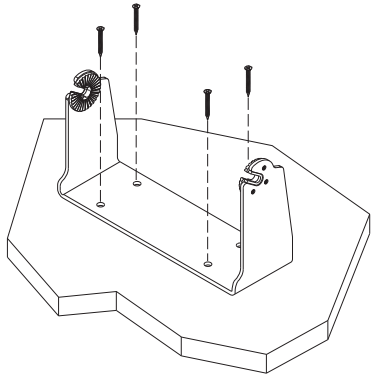

4

