100A Ship-to-Shore Devices



100A 125/250V Pin and Sleeve Devices

Description	Catalog Number
Yellow Zytel® PBT watertight plug has gasketed locking ring to make plug/receptacle interface watertight. Cord grip range is 1.06–1.94 in. (26.9–49.3). **IP56 suitability.**	**M4100P12**
Gray PBT dockside receptacle has gasketed, spring-loaded cover. Closes automatically when not in use and is watertight when securely fastened. Mounting holes are 4.88 in. (123.8) on centers. Mounting screws and gasket included. **IP56 suitability.**	**M4100R12**
Yellow Zytel PBT watertight connector body for mating plug to connector interface on extension cords or adapters. Cord grip range is 1.06–1.94 in. (26.9–49.3). Note: It cannot be mated to the shore power inlet. **IP56 suitability.**	**M4100C12**
Gray PBT shore power inlet has gasketed, spring-loaded cover which closes automatically when not in use and is watertight when securely fastened. Mounting holes are 4.88 in. (123.8) on centers and rear portion has 3.94 in. (100.0) diameter. Mounting screws and gasket included. **IP56 suitability.**	**M4100B12R**
Yellow Zytel PBT watertight connector body has gasketed locking ring to make inlet/connector interface watertight. Cord grip range is 1.06–1.94 in. (26.9–49.3). Note: This device mates with shore power inlet only. **IP56 suitability.**	**M4100C12R**

100A Back Boxes and Accessories

Description	Catalog Number
Back box for inlets and receptacles has 15° angle section which can be installed in any of 4 positions. Box is cast aluminum with corrosion-resistant gray alkyd-based enamel finish and 1-1/2 in. NPT hub which can be mounted for either top or bottom feed. **IP56 suitability.**	**FW60100**
15° angle cast aluminum back box has corrosion-resistant gray finish and top hub with 1-1/2 in. NPT. 100A receptacles can be mounted directly to it.	**BB1001W**
Same as BB1001W except threaded top hub is 2 in. NPT.	**BB1002W**
15° angle non-metallic back box, made of high-grade engineered thermoplastic Valox® to resist chemicals, abuse and U.V. rays. Has integral grounding plate, 1-1/2 in. NPT hub size and 120 cu. in. capacity (hub is not included - Raco part number 1706 is recommended). **IP57 suitability.**	**BB100N**
Closure Cap for 100A plugs and connector bodies that (do not have a cap attached) have locking rings.	**PC100**
Replacement lift cover assembly; includes cover, arm and assembly tool.	**CA100**
Replacement locking ring and cord clamp.	**CC100**
Replacement locking ring only.	**LR100**

Note: Periodic cleaning and lubrication (such as LPS-1® made by Holt Lloyd Corp.) of the pins and sleeves of these devices is necessary to enjoy years of optimal use.

Product Dimensions

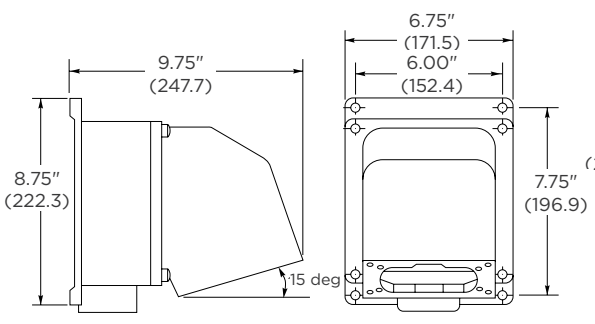

FW60100

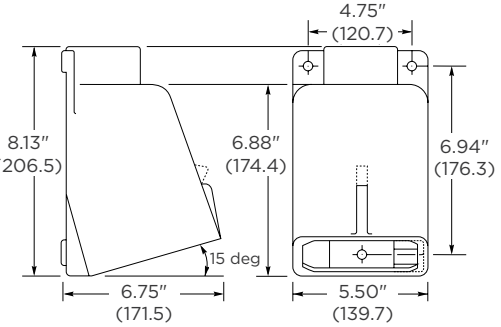

BB1001W, BB1002W

Zytel® is a registered trademark of E.I. DuPont.
Valox® is a trademark of SABIC Innovative Plastics, acquired from General Electric Company.
Dimensions in Inches (mm)



M4100P12



M4100R12



M4100C12



M4100B12R



M4100C12R



FW60100



BB1001W
BB1002W

HUBBELL
Wiring Device-Kellems