SMD Sälzer Modular Design

Mounting Form Table

S600
80 A up to 160 A

Section

Front Mounting Switches **A**

Base Mounting Switches **B**

Sälzer Electric GmbH
Clemens-Pfau-Platz 27
09306 Rochlitz
www.saelzer.com

Headquarters:
+49 (0) 37 37 / 87-280
sales@salzer.de

Originator: Sälzer Electric GmbH · Product Data Management (PDM) · 09306 Rochlitz (Germany)
Copyright reserved by Sälzer Electric GmbH. This document replaces all previous issues.
Valid until a new version is published. Changes and revisions reserved.

Mounting Form Table

Mtg. forms	Pages	
002M1	B1-1	(42)
002G1	B1-2	(43)
003M1	A1-1	(4)
003G1	A1-2	(5)
003H1	A1-3	(6)
004H1	A1-3	(6)
012G1	B1-3	(44)
013G1	A1-4	(7)
013H1	A1-6	(8)
014H1	A1-6	(8)
033M1	A1-9	(12)
033M4	A1-9	(12)
033N1	A1-10	(13)
033N4	A1-10	(13)
033H1	A1-11	(14)
033H4	A1-11	(14)

Mtg. forms	Pages	
034M1	B1-9	(50)
034M4	B1-9	(50)
034N1	B1-10	(51)
034N4	B1-10	(51)
034H1	B1-11	(52)
034H4	B1-11	(52)
036H1	A1-12	(15)
036H4	A1-12	(15)
040H1	B1-4	(45)
041M1	B1-5	(46)
041G1	B1-6	(47)
041H1	B1-7	(48)
042M1	B1-12	(53)
042G1	B1-13	(54)
042H1	B1-14	(55)
043H1	B1-15	(56)

Mtg. forms	Pages	
044H1	B1-8	(49)
044H4	B1-8	(49)
060M1	A1-13	(16)
103M1	A1-6	(9)
103G1	A1-7	(10)
113G1	A1-8	(11)
602M1	A1-15	(17)
602G1	A1-16	(18)
603M1	A1-19	(19)
603G1	A1-20	(20)
604M1	A1-23	(21)
604G1	A1-24	(22)
607M1	A1-17	(23)
607G1	A1-18	(24)
608M1	A1-21	(25)
608G1	A1-22	(26)

Mtg. forms	Pages	
609M1	A1-25	(27)
609G1	A1-26	(28)
612M1	A1-15	(29)
612G1	A1-16	(30)
613M1	A1-19	(31)
613G1	A1-20	(32)
614M1	A1-23	(33)
614G1	A1-24	(34)
617M1	A1-17	(35)
617G1	A1-18	(36)
618M1	A1-34	(37)
618G1	A1-35	(38)
619M1	A1-36	(39)
619G1	A1-37	(40)

SMD Sälzer Modular Design

Section A

	Page from	to
Four hole mounting	A1-1	A1-13
Solenoid Lock Device Interlocked when solenoid is de-energised	A1-14	A1-25
Solenoid Lock Device Interlocked when solenoid is energised	A1-26	A1-37

Originator: Sälzer Electric GmbH · Product Data Management (PDM) · 09306 Rochlitz (Germany)
Copyright reserved by Sälzer Electric GmbH. This document replaces all previous issues.
Valid until a new version is published. Changes and revisions reserved.

Front mounting switch

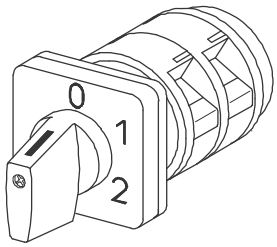

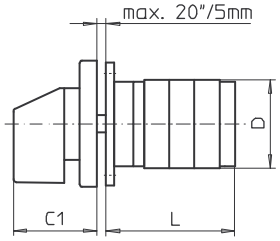

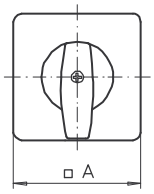

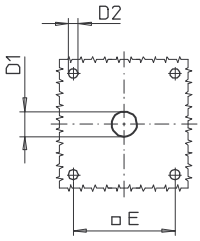

Product line
S600

Front mounting switch

Four hole mounting
68 x 68 mm

M-operator module
88 x 88 mm escutcheon

003M1 (IP55)

Complete switch	Poles	Product lines	Rated data (IEC 60947) Operational current I_e AC-21A A	Operational power at 380–440 V AC-23A kW	AC-3 kW	Order code number
Rotary Cam Switches Switching angle 30°/45°/60°/90°	1 ... 24	S600	80 100 160	45 55 75	30 37 45	**S606 - 61 ... - 003M1** **S608 - 61 ... - 003M1** **S612 - 61 ... - 003M1**

SMD modules for basic switch (A33)

Mounting form module for 003M1	S600	**BFA6 - 003**
M-operator module 88 x 88 mm, mounting form 003M1 Starting position of the handle 09h Escutcheon black, M-handle black		**6AM1**
M-operator module 88 x 88 mm, mounting form 003M1 Starting position of the handle 12h Escutcheon black, M-handle black		**6BM1**
Legend plate silver, operator module 003M1		**FAS6 - ....** (FA number)

Dimensions (mm)

Type	A	C1	D	D1	D2	E	L with ... stages (max. 12) 1	2	3	4	5	6	7	each add. stage
S606	88	52	84	15	5,5	68	59	81	103	125	147	169	191	22
S608	88	52	88	15	5,5	68	66	92	118	144	170	196	222	26
S612	88	52	88	15	5,5	68	72	104	136	168	200	232	264	32

Front mounting switch

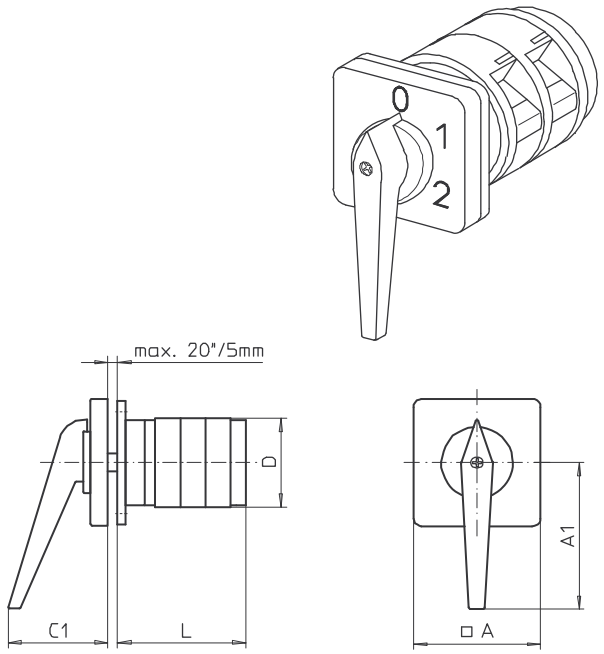

Product line
S600

Front mounting switch

Four hole mounting
68 x 68 mm

G-operator module
88 x 88 mm escutcheon

003G1 (IP55)

Complete switch	Poles	Product lines	Rated data (IEC 60947) Operational current I_e AC-21A A	Operational power at 380–440 V AC-23A kW	AC-3 kW	Order code number
Rotary Cam Switches Switching angle 30°/45°/60°/90°	1 ... 24	S600	80 100 160	45 55 75	30 37 45	**S606 - 61 ... - 003G1** **S608 - 61 ... - 003G1** **S612 - 61 ... - 003G1**

SMD modules for basic switch (A33)

Mounting form module for 003G1	S600	**BFA6 - 003**
G-operator module 88 x 88 mm, mounting form 003G1 Starting position of the handle 09h Escutcheon black, G-handle black		**6AG1**
G-operator module 88 x 88 mm, mounting form 003G1 Starting position of the handle 12h Escutcheon black, G-handle black		**6BG1**
Legend plate silver, operator module 003G1		**FAS6 - ....** (FA number)

Dimensions (mm)

Type	A	A1	C1	D	D1	D2	E	L with ... stages (max. 12) 1	2	3	4	5	6	each add. stage
S606	88	86	66	84	15	5,5	68	59	81	103	125	147	169	22
S608	88	86	66	88	15	5,5	68	66	92	118	144	170	196	26
S612	88	86	66	88	15	5,5	68	72	104	136	168	200	232	32

Front mounting switch

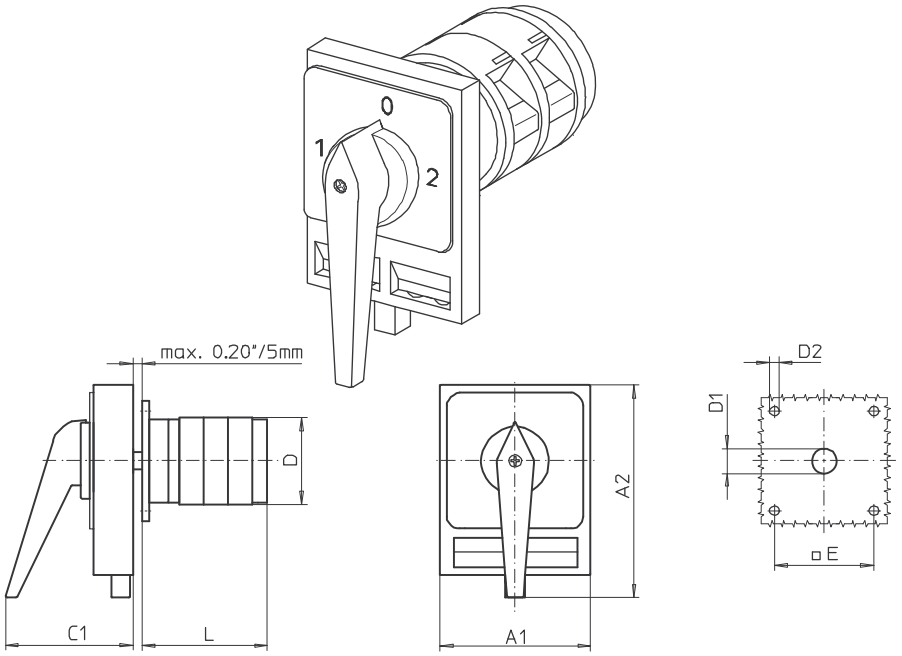

Product line
S600

Front mounting switch

Four hole mounting
68 x 68 mm

H-padlock device
98 x 142 mm

003H1 (IP55)
004H1 (IP55)

Complete switch	Poles	Product lines	Rated data (IEC 60947) Operational current I_e AC-21A A	Operational power at 380–440 V AC-23A kW	AC-3 kW	Order code number
Rotary Cam Switches	1 ... 24	S600	80	45	30	**S606 - 61 ... - 003H1**
Switching angle 60°/90°			100	55	37	**S608 - 61 ... - 003H1**
padlockable 12h			160	75	45	**S612 - 61 ... - 003H1**
Rotary Cam Switches	1 ... 24	S600	80	45	30	**S606 - 61 ... - 004H1**
Switching angle 60°/90°			100	55	37	**S608 - 61 ... - 004H1**
padlockable 09h/12h/03h/06h			160	75	45	**S612 - 61 ... - 004H1**

SMD modules for basic switch (A33)

Mounting form module for 003H1/004H1	S600	**BFA6 - 003**
H-padlock device black, mounting form 003H1 Starting position of the handle 12h, Escutcheon black, handle black		**6EH1-12**
H-padlock device black, mounting form 004H1 Starting position of the handle 12h, Escutcheon black, handle black		**6EH1-99**
Legend plate silver, operator modules 003H1/004H1		**FAS6 - ....** (FA number)

Dimensions (mm)

Type	A1	A2	C1	D	D1	D2	E	L with ... stages (max. 12) 1	2	3	4	5	6	each add. stage
S606	98	142	83	84	15	5,5	68	59	83	103	125	147	169	22
S608	98	142	83	88	15	5,5	68	66	95	118	144	170	196	26
S612	98	142	83	88	15	5,5	68	72	107	136	168	200	232	32

Front mounting switch

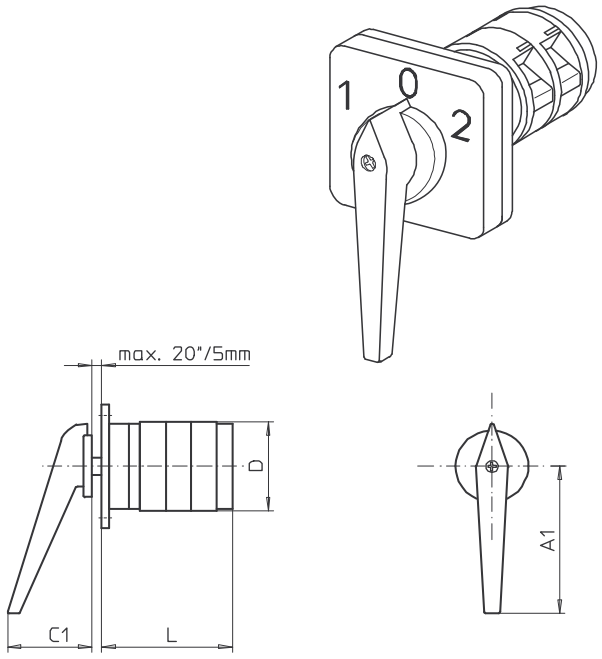

Product line
S600

Front mounting switch
Operator module of next size

Four hole mounting
104 x 104 mm

G-operator module
130 x 130 mm escutcheon

013G1 (IP55)

Complete switch	**Poles**	**Product lines**	**Rated data** (IEC 60947) Operational current I_e AC-21A A	Operational power at 380–440 V AC-23A kW	AC-3 kW	**Order code number**
Rotary Cam Switches Switching angle 30°/45°/60°/90°	1 ... 24	S600	80 100 160	45 55 75	30 37 45	**S606 - 61 ... - 013G1** **S608 - 61 ... - 013G1** **S612 - 61 ... - 013G1**

SMD modules for basic switch (A45)

Mounting form module for 013G1	S600	**BFA6 - 013**
G-operator module 130 x 130 mm, mounting form 013G1 Starting position of the handle 09h Escutcheon black, G-handle black		**8CG1**
G-operator module 130 x 130mm, mounting form 013G1 Starting position of the handle 12h Escutcheon black, G-handle black		**8DG1**
Legend plate silver, operator module 013G1		**FAS8 - ....** (FA number)

Dimensions (mm)

Type	**A**	**A1**	**C1**	**D**	**D1**	**D2**	L with ... stages (max. 12) **E**	**1**	**2**	**3**	**4**	**5**	**6**	**each add. stage**
S606	130	117	74	84	20	5,5	104	61	83	105	127	149	171	22
S608	130	117	74	88	20	5,5	104	68	94	120	146	172	198	26
S612	130	117	74	88	20	5,5	104	74	106	138	170	202	234	32

Front mounting switch

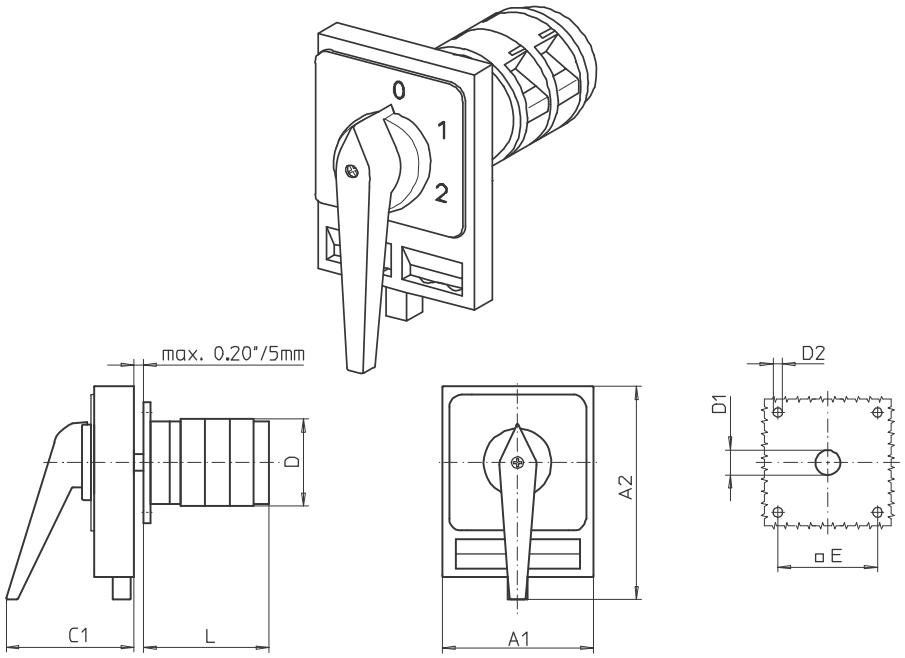

Product line
S600

Front mounting switch
Operator module of next size

Four hole mounting
104 x 104 mm

H-padlock device
130 x 176 mm

013H1 (IP55)
014H1 (IP55)

Complete switch	**Poles**	**Product lines**	**Rated data** (IEC 60947) Operational current I_e AC-21A A	Operational power at 380–440 V AC-23A kW	AC-3 kW	**Order code number**
Rotary Cam Switches	1 ... 24	S600	80	45	30	**S606 - 61 ... - 013H1**
Switching angle 60°/90°			100	55	37	**S608 - 61 ... - 013H1**
padlockable 12h			160	75	45	**S612 - 61 ... - 013H1**
Rotary Cam Switches	1 ... 24	S600	80	45	30	**S606 - 61 ... - 014H1**
Switching angle 60°/90°			100	55	37	**S608 - 61 ... - 014H1**
padlockable 09h/12h/03h/06h			160	75	45	**S612 - 61 ... - 014H1**

SMD modules for basic switch (A63)

Mounting form module for 013H1/014H1	S600	**BFA6 - 013**
H-padlock device black, mounting form 013H1 Starting position of the handle 12h Escutcheon black, handle black		**8GH1-12**
H-padlock device black, mounting form 014H1 Starting position of the handle 12h Escutcheon black, handle black		**8GH1-99**
Legend plate silver, operator module 013H1		**FAS8 - ....** (FA number)

Dimensions (mm)

								L with ... stages (max. 12)						**each add.**
Type	**A1**	**A2**	**C1**	**D**	**D1**	**D2**	**E**	**1**	**2**	**3**	**4**	**5**	**6**	**stage**
S606	130	176	93	84	20	5,5	104	59	81	103	125	147	169	22
S608	130	176	93	88	20	5,5	104	66	92	118	144	170	196	26
S612	130	176	93	88	20	5,5	104	72	104	136	168	200	232	32

Front mounting switch

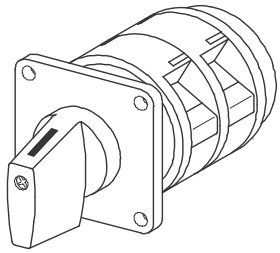

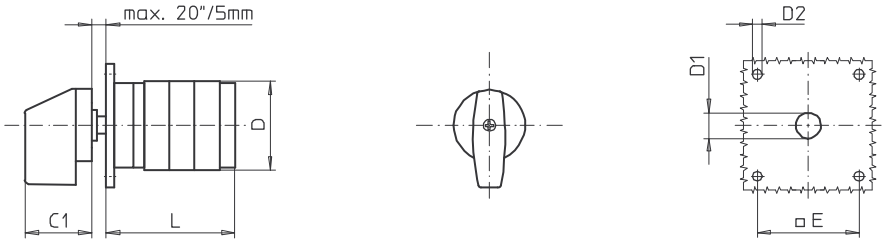

Product line
S600

Front mounting switch

Four hole mounting
68 x 68 mm

Shaft shortened by 5 mm

103M1 (IP55)

Complete switch	**Poles**	**Product lines**	**Rated data** (IEC 60947) Operational current I_e AC-21A A	Operational power at 380–440 V AC-23A kW	AC-3 kW	**Order code number**
Rotary Cam Switches Switching angle 30°/45°/60°/90°	1 ... 24	S600	80 100 160	45 55 75	30 37 45	**S606 - 61 ... - 103M1** **S608 - 61 ... - 103M1** **S612 - 61 ... - 103M1**

SMD modules for basic switch (A28)

Mounting form module for 103M1	S600	**BFA6 - 003**
M-operator module, mounting form 103M1 Starting position of the handle 09h, M-handle black		**6XM1-09**
M-operator module, mounting form 103M1 Starting position of the handle 12h, M-handle black		**6XM1-12**

Dimensions (mm)

						L with ... stages (max. 12)								each add.
Type	**C1**	**D**	**D1**	**D2**	**E**	**1**	**2**	**3**	**4**	**5**	**6**	**7**	**8**	**stage**
S606	42	84	15	5,5	68	59	81	103	125	147	169	191	213	22
S608	42	88	15	5,5	68	66	92	118	144	170	196	222	248	26
S612	42	88	15	5,5	68	72	104	136	168	200	232	264	296	32

Front mounting switch

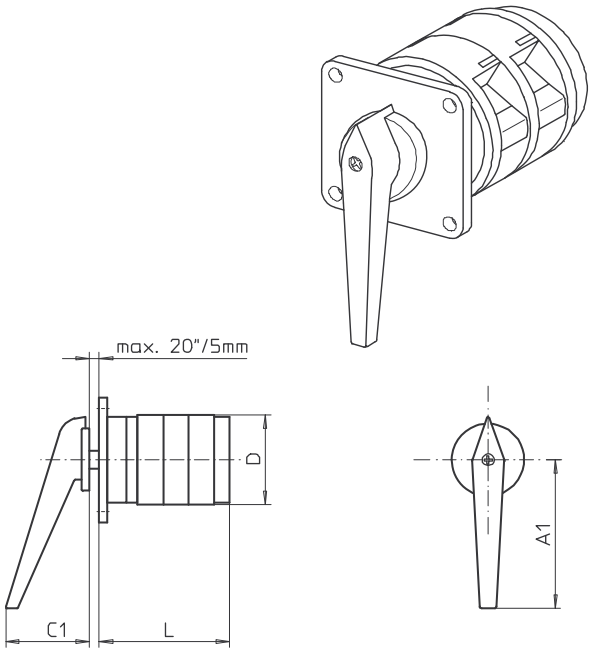

Product line
S600

Front mounting switch

Four hole mounting
68 x 68 mm

Shaft shortened by 5 mm

103G1 (IP55)

Complete switch	Poles	Product lines	Rated data (IEC 60947) Operational current I_e AC-21A A	Operational power at 380–440 V AC-23A kW	AC-3 kW	Order code number
Rotary Cam Switches Switching angle 30°/45°/60°/90°	1 ... 24	S600	80 100 160	45 55 75	30 37 45	**S606 - 61 ... - 103G1** **S608 - 61 ... - 103G1** **S612 - 61 ... - 103G1**

SMD modules for basic switch (A28)

Mounting form module for 103G1	S600	**BFA6 - 003**
M-operator module, mounting form 103G1 Starting position of the handle 09h, G-handle black		**6XG1-09**
M-operator module, mounting form 103G1 Starting position of the handle 12h, G-handle black		**6XG1-12**

Dimensions (mm)

							L with ... stages (max. 12)							each add.
Type	**A1**	**C1**	**D**	**D1**	**D2**	**E**	**1**	**2**	**3**	**4**	**5**	**6**	**7**	**stage**
S606	86	54	84	15	5,5	68	59	81	103	125	147	169	191	22
S608	86	54	88	15	5,5	68	66	92	118	144	170	196	222	26
S612	86	54	88	15	5,5	68	72	104	136	168	200	232	264	32

Front mounting switch

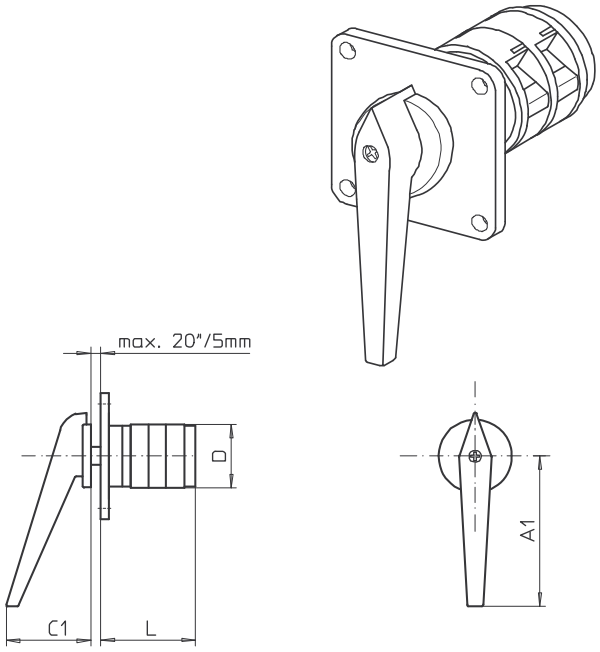

Product line
S600

Front mounting switch
Operator module of next size

Four hole mounting
104 x 104 mm

Shaft shortened by 12 mm

113G1 (IP55)

Complete switch	Poles	Product lines	Rated data (IEC 60947) Operational current I_e AC-21A A	Operational power at 380–440 V AC-23A kW	AC-3 kW	Order code number
Rotary Cam Switches Switching angle 30°/45°/60°/90°	1 ... 24	S600	80 100 160	45 55 75	30 37 45	**S606 - 61 ... - 113G1** **S608 - 61 ... - 113G1** **S612 - 61 ... - 113G1**

SMD modules for basic switch (A33)

Mounting form module for 113G1	S600	**BFA6 - 013**
G-operator module, mounting form 113G1 Starting position of the handle 09h, G-handle black		**8YG1-09**
G-operator module, mounting form 113G1 Starting position of the handle 12h, G-handle black		**8YG1-12**

Dimensions (mm)

Type	A1	C1	D	D1	D2	E	L with ... stages (max. 12) 1	2	3	4	5	6	7	each add. stage
S606	117	62	84	20	5,5	104	61	83	105	127	149	171	193	22
S608	117	62	88	20	5,5	104	68	94	120	146	172	198	224	26
S612	117	62	88	20	5,5	104	74	106	138	170	202	234	266	32

Front mounting switch

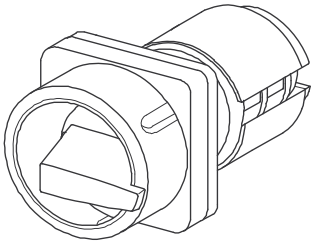

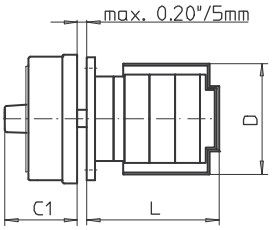

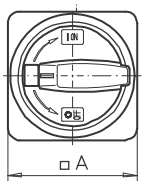

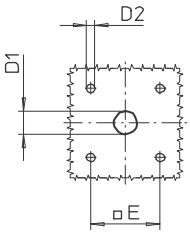

Product line
S600

Front mounting switch

Four hole mounting
68 x 68 mm

M-padlock device
88 x 88 mm

033M1 (IP55)
033M4 (IP55)

Complete switch	Poles	Product lines	Rated data (IEC 60947) Operational current I_e AC-21A A	Operational power at 380–440 V AC-23A kW	AC-3 kW	Order code number
Main Switches Switching angle 90° OFF position padlockable 09h	3 ... 8	S600	80 100 160	45 55 75	30 37 45	**S606 - 61 ... - 033M1** **S608 - 61 ... - 033M1** **S612 - 61 ... - 033M1**
Main/Emergency-Off Switches Switching angle 90° OFF position padlockable 09h	3 ... 8	S600	80 100 160	45 55 75	30 37 45	**S606 - 61 ... - 033M4** **S608 - 61 ... - 033M4** **S612 - 61 ... - 033M4**

SMD modules for basic switch (A33)

Mounting form module for 033M.	S600		**BFA6 - 003**
M-padlock device 88 x 88 mm, mounting form 033M1 Escutcheon black, padlockable handle black			**6KM1**
M-padlock device 88 x 88 mm, mounting form 033M4 Escutcheon yellow, padlockable handle red			**6KM4**
		S606,S608	S612
Terminal covers (2x)	2 contact stages	**TCE6**	**TCD6**
	3 contact stages	**TCD6**	**TCB6**

Dimensions (mm)

Type	A	C1	D	D1	D2	E	L with ... stages (max. 4) 1	2	3	4	5	6	7	each add. stage
S606	88	50	100	15	5,5	68	-	83	105	127	-	-	-	-
S608	88	50	100	15	5,5	68	-	95	121	147	-	-	-	-
S612	88	50	100	15	5,5	68	-	107	139	171	-	-	-	-

Front mounting switch

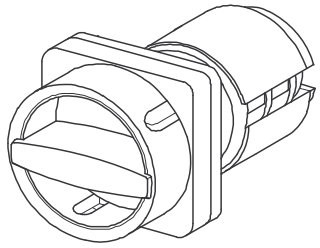

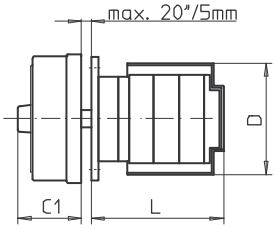

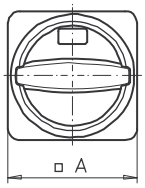

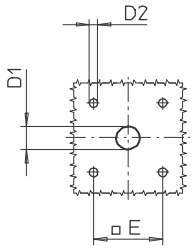

Product line
S600

Front mounting switch

Four hole mounting
68 x 68 mm

N-padlock device
88 x 88 mm

033N1 (IP55)
033N4 (IP55)

Complete switch	Poles	Product lines	Rated data (IEC 60947) Operational current I_e AC-21A A	Operational power at 380–440 V AC-23A kW	AC-3 kW	Order code number
Main Switches Switching angle 90° OFF position padlockable 09h	3 ... 8	S600	80 100 160	45 55 75	30 37 45	**S606 - 61 ... - 033N1** **S608 - 61 ... - 033N1** **S612 - 61 ... - 033N1**
Main/Emergency-Off Switches Switching angle 90° OFF position padlockable 09h	3 ... 8	S600	80 100 160	45 55 75	30 37 45	**S606 - 61 ... - 033N4** **S608 - 61 ... - 033N4** **S612 - 61 ... - 033N4**

SMD modules for basic switch (A33)

Mounting form module for 033N.	S600		**BFA6 - 003**
N-padlock device 88 x 88 mm, mounting form 033N1 Escutcheon black, padlockable handle black			**6KN1**
N-padlock device 88 x 88 mm, mounting form 033N4 Escutcheon yellow, padlockable handle red			**6KN4**
		S606,S608	S612
Terminal covers (2x)	2 contact stages	**TCE6**	**TCD6**
	3 contact stages	**TCD6**	**TCB6**

Dimensions (mm)

Type	A	C1	D	D1	D2	E	L with ... stages (max. 4) 1	2	3	4	5	6	7	each add. stage
S606	88	45	100	15	5,5	68	-	83	105	127	-	-	-	-
S608	88	45	100	15	5,5	68	-	95	121	147	-	-	-	-
S612	88	45	100	15	5,5	68	-	107	139	171	-	-	-	-

Front mounting switch

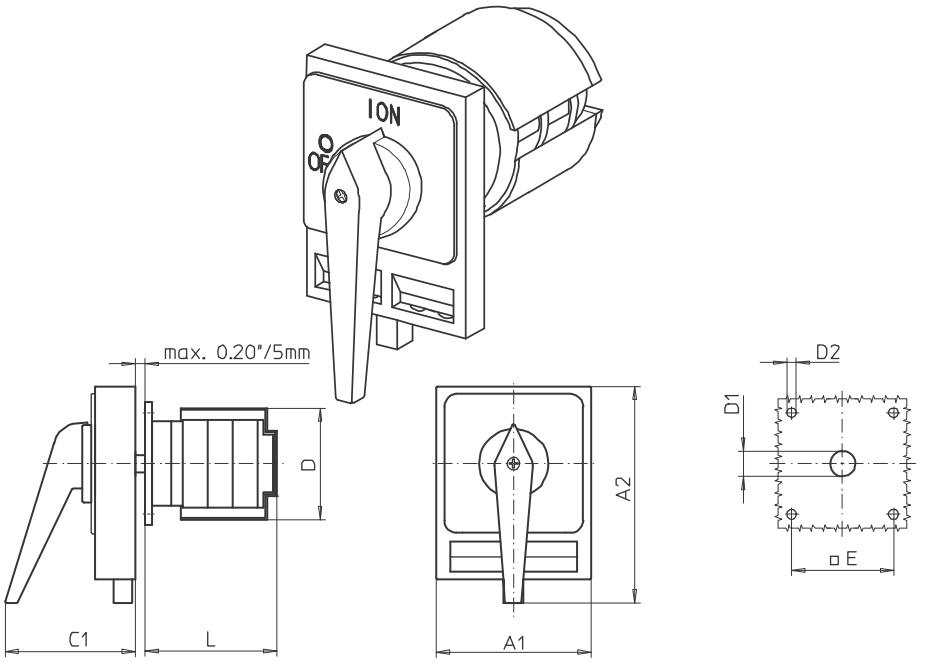

Product line
S600

Front mounting switch

Four hole mounting
68 x 68 mm

H-padlock device
98 x 142 mm

033H1 (IP55)
033H4 (IP55)

Complete switch	Poles	Product lines	Rated data (IEC 60947) Operational current I_e AC-21A A	Operational power at 380–440 V AC-23A kW	AC-3 kW	Order code number
Main Switches Switching angle 90° OFF position padlockable 09h	3 ... 8	S600	80 100 160	45 55 75	30 37 45	**S606 - 61 ... - 033H1** **S608 - 61 ... - 033H1** **S612 - 61 ... - 033H1**
Main/Emergency-Off Switches Switching angle 90° OFF position padlockable 09h	3 ... 8	S600	80 100 160	45 55 75	30 37 45	**S606 - 61 ... - 033H4** **S608 - 61 ... - 033H4** **S612 - 61 ... - 033H4**

SMD modules for basic switch (A33)

Mounting form module for 033H.	S600		**BFA6 - 003**
H-padlock device black, mounting form 033H1 Starting position of the handle 09h, H-handle black			**6CH1-09**
H-padlock device black, mounting form 033H4 Starting position of the handle 09h, H-handle red			**6CH4-09**
Legend plate silver, mounting form 033H1 Legend plate yellow, mounting form 033H4			**FAS6 - ....** (FA number) **FBS6 - ....** (FA number)
Additional legend plate			**FAZ2-8041**
Terminal covers (2x)	2 contact stages 3 contact stages	S606,S608 **TCE6** **TCD6**	S612 **TCD6** **TCB6**

Dimensions (mm)

Type	A1	A2	C1	D	D1	D2	E	L with ... stages (max. 4) 1	2	3	4	5	6	each add. stage
S606	98	142	83	100	15	5,5	68	-	83	105	127	-	-	-
S608	98	142	83	100	15	5,5	68	-	95	121	147	-	-	-
S612	98	142	83	100	15	5,5	68	-	107	139	171	-	-	-

Front mounting switch

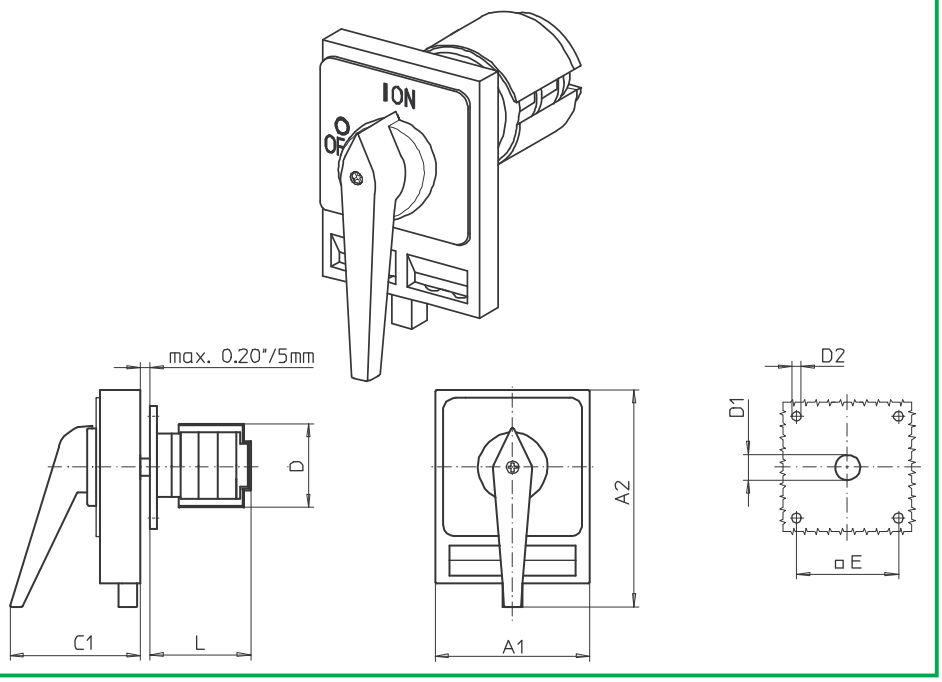

Product line
S600

Front mounting switch
Operator module of next size

Four hole mounting
104 x 104 mm

H-padlock device
130 x 176 mm

036H1 (IP55)
036H4 (IP55)

Complete switch	Poles	Product lines	Rated data (IEC 60947) Operational current I_e AC-21A A	Operational power at 380–440 V AC-23A kW	AC-3 kW	Order code number
Main Switches Switching angle 90° OFF position padlockable 09h	3 ... 8	S600	80 100 160	45 55 75	30 37 45	**S606 - 61 ... - 036H1** **S608 - 61 ... - 036H1** **S612 - 61 ... - 036H1**
Main/Emergency-Off Switches Switching angle 90° OFF position padlockable 09h	3 ... 8	S600	80 100 160	45 55 75	30 37 45	**S606 - 61 ... - 036H4** **S608 - 61 ... - 036H4** **S612 - 61 ... - 036H4**

SMD modules for basic switch (A63)

Mounting form module for 036H.	S600	**BFA6 - 013**
H-padlock device black, mounting form 036H1 Starting position of the handle 09h, H-handle black		**8FH1-09**
H-padlock device black, mounting form 036H4 Starting position of the handle 09h, H-handle red		**8FH4-09**
Legend plate silver, mounting form 036H1 Legend plate yellow, mounting form 036H4		**FAS8 - ....** (FA number) **FBS8 - ....** (FA number)
Terminal covers (2x)		S606,S608 / S612
	2 contact stages	**TCE6** / **TCD6**
	3 contact stages	**TCD6** / **TCB6**

Dimensions (mm)

Type	A1	A2	C1	D	D1	D2	E	L with ... stages (max. 4) 1	2	3	4	5	6	each add. stage
S606	130	176	93	100	20	5,5	68	-	83	105	127	-	-	-
S608	130	176	93	100	20	5,5	68	-	95	121	147	-	-	-
S612	130	176	93	100	20	5,5	68	-	107	139	171	-	-	-

Front mounting switch

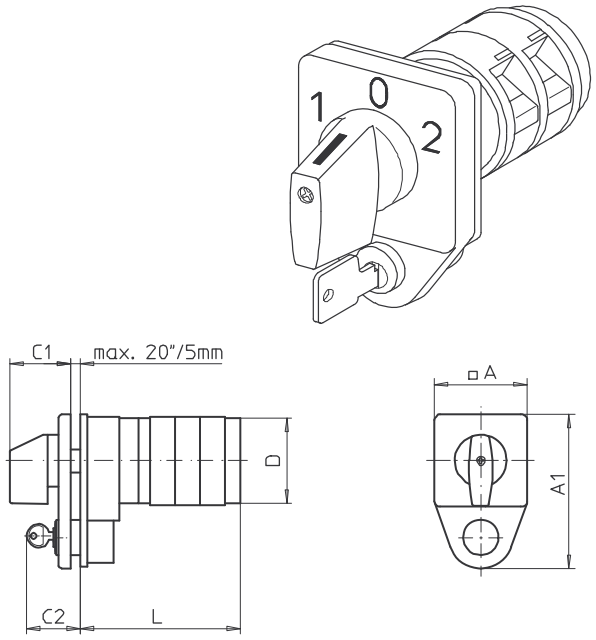

Product line
S600

Front mounting switch
With Cylinder lock device
Key number CL1

Four hole mounting
68 x 68 mm

M-operator module
88 x 88 mm escutcheon

060M1 (IP40)

Complete switch	**Poles**	**Product lines**	**Rated data** (IEC 60947) Operational current I_e AC-21A A	Operational power at 380–440 V AC-23A kW	AC-3 kW	**Order code number**
Rotary Cam Switches Switching angle 30°/45°/60°/90°	1 ... 24	S600	80	45	30	**S606 - 61 ... - 060M1**
			100	55	37	**S608 - 61 ... - 060M1**
			160	75	45	**S612 - 61 ... - 060M1**

Position “OFF“ or start position locked

Other locking arrangements available; please specify upon request

2 keys, Key number CL1

Keylockable in selected positions

Further lock types and security lock on request.

SMD modules for basic switch (A49)

Mounting form module for 060M1	S600	**BFA6 - 060**
M-operator module, mounting form 060M1 Starting position of the handle 09h Escutcheon black, M-handle black		**6MM1**
Starting position of the handle 12h Escutcheon black, M-handle black		**6NM1**
Legend plate silver, operator module 060M1		**FAS6 - ....** (FA number)

Dimensions (mm)

Type	**A**	**A1**	**C1**	**C2**	**D**	**D1**	**D2**	**D3**	**E**	**E1**	L with ... stages (max. 12) **1**	**2**	**3**	**4**	**each add. stage**
S606	88	118	52	42	84	15	5,5	19	68	58	73	95	117	139	22
S608	88	118	52	42	88	15	5,5	19	68	58	80	106	132	158	26
S612	88	118	52	42	88	15	5,5	19	68	58	86	118	150	182	32

Front mounting switch

For US market only

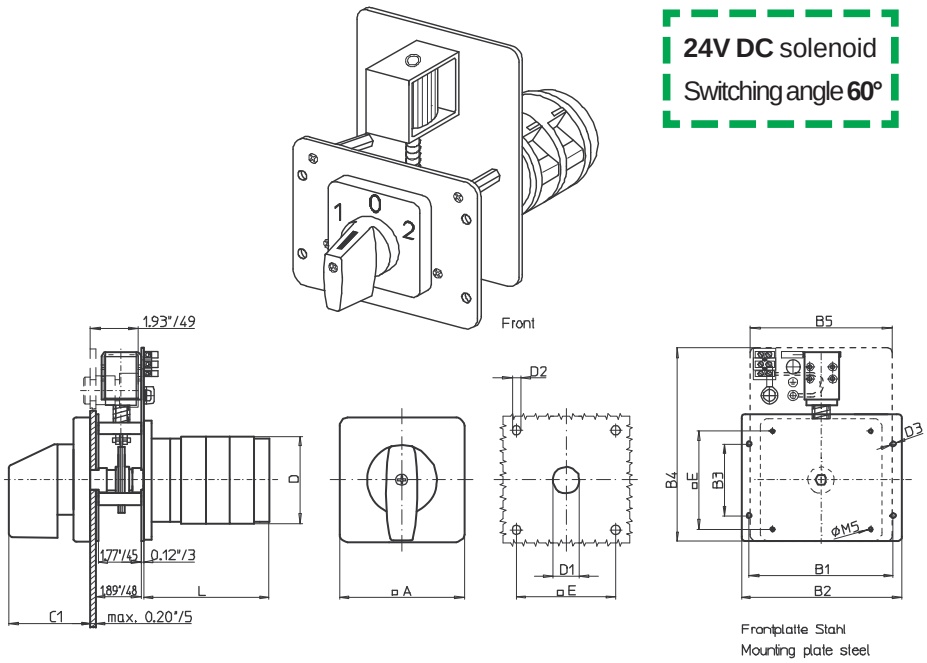

24V DC solenoid
Switching angle **60°**

Product line
S600

Front mounting switch
Solenoid lock device
Solenoid 24V DC

Interlock
Solenoid de-energised

Four hole mounting
152,4mm x 76,2mm (6“ x 3“)

M-operator module
88 x 88 mm escutcheon

602M1 (IP55)

Complete switch	Poles	Product lines	Rated data (IEC 60947) Operational current I_e AC-21A A	Operational power at 380–440 V AC-23A kW	AC-3 kW	Order code number
Rotary Cam Switches	1 ... 24	S600	80	45	30	**S606 - 61 ... - 602M1**
Switching angle 60°			100	55	37	**S608 - 61 ... - 602M1**
padlockable in 60° steps			160	75	45	**S612 - 61 ... - 602M1**

SMD modules for basic switch (A84)

Mounting form module for 602M1	S600	**BFA6-003**
Interlock module, mounting form 602M1		**ZVS6-DC024/60**
M-operator module 88 x 88 mm, mounting form 602M1 Starting position of the handle 09h Escutcheon black, handle black		**6AM1**
M-operator module 88 x 88 mm, mounting form 602M1 Starting position of the handle 12h Escutcheon black, handle black		**6BM1**
Legend plate silver, operator module 602M1		**FAS6 - ....** (FA number)

Dimensions (mm)

Type	A	B1	B2	B3	B4	B5	C1	D	D1	D2	D3	E	L*)	each add. stage
S606	88	152,4	170	76,2	205	150	52	210	20	5,5	5,5	68	59	22
S608	88	152,4	170	76,2	205	150	52	210	20	5,5	5,5	68	66	26
S612	88	152,4	170	76,2	205	150	52	210	20	5,5	5,5	68	72	32

L*) Dimension for switch with 1 contact stage

Front mounting switch

For US market only

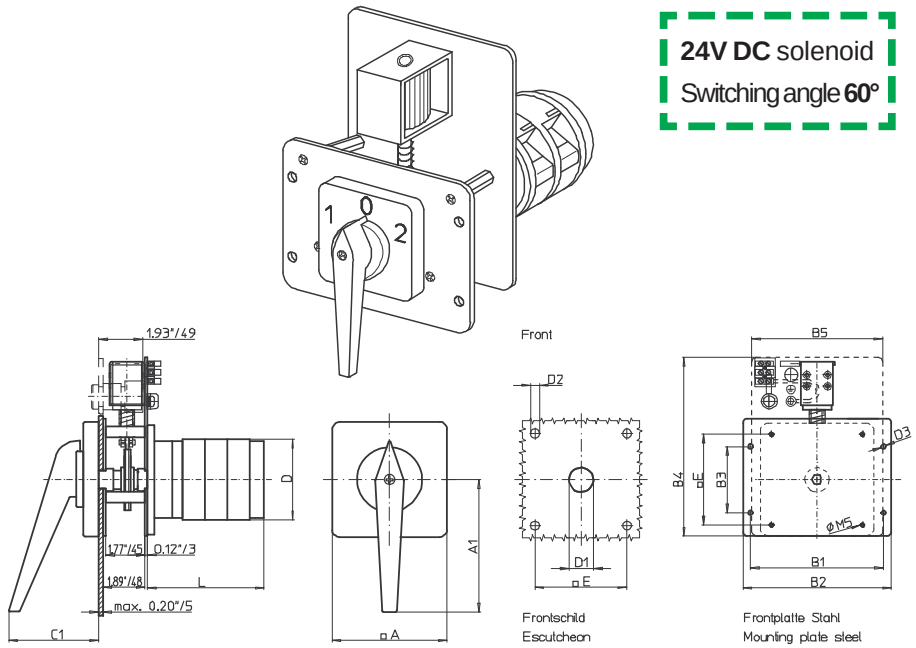

24V DC solenoid
Switching angle **60°**

Product line
S600

Front mounting switch
Solenoid lock device
Solenoid 24V DC

Interlock
Solenoid de-energised

Four hole mounting
152,4mm x 76,2mm (6“ x 3“)

G-operator module
88 x 88 mm escutcheon

602G1 (IP55)

Complete switch	Poles	Product lines	Rated data (IEC 60947) Operational current I_e AC-21A A	Operational power at 380–440 V AC-23A kW	AC-3 kW	Order code number
Rotary Cam Switches	1 ... 24	S600	80	45	30	**S606 - 61 ... - 602G1**
Switching angle 60°			100	55	37	**S608 - 61 ... - 602G1**
padlockable in 60° steps			160	75	45	**S612 - 61 ... - 602G1**

SMD modules for basic switch (A84)

Mounting form module for 602G1	S600	**BFA6-003**
Interlock module, mounting form 602G1		**ZVS6-DC024/60**
G-operator module 88 x 88 mm, mounting form 602G1 Starting position of the handle 09h Escutcheon black, handle black		**6AG1**
G-operator module 88 x 88 mm, mounting form 602G1 Starting position of the handle 12h Escutcheon black, handle black		**6BG1**
Legend plate silver, operator module 602G1		**FAS6 - ....** (FA number)

Dimensions (mm)

Type	A	A1	B1	B2	B3	B4	B5	C1	D	D1	D2	D3	E	L*)	each add. stage
S606	88	86	152,4	170	76,2	205	150	74	210	20	5,5	5,5	68	59	22
S608	88	86	152,4	170	76,2	205	150	74	210	20	5,5	5,5	68	66	26
S612	88	86	152,4	170	76,2	205	150	74	210	20	5,5	5,5	68	72	32

L*) Dimension for switch with 1 contact stage

Front mounting switch

Available upon request

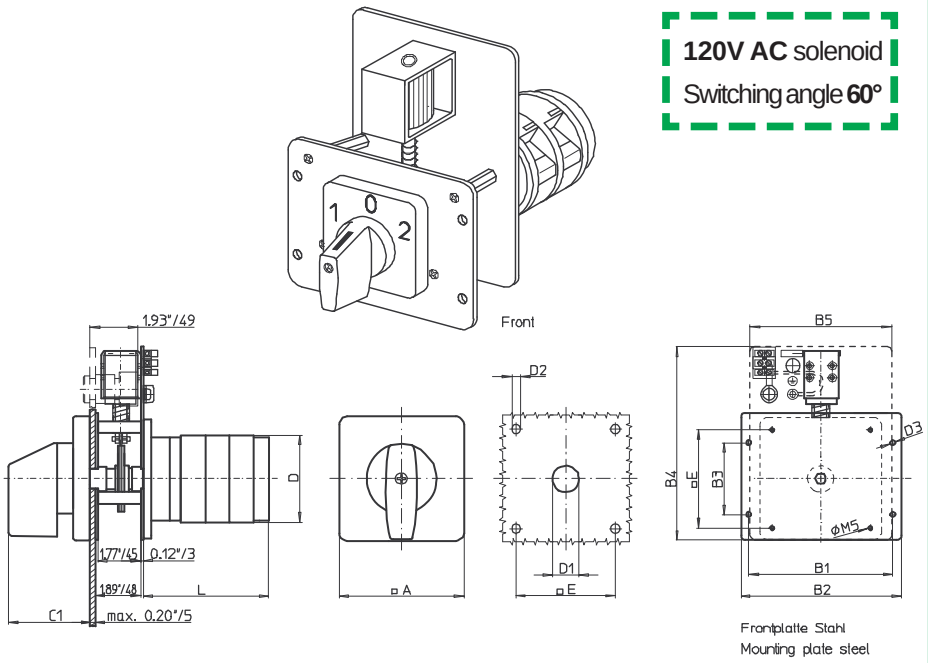

Product line
S600

Front mounting switch
Solenoid lock device
Solenoid 120V AC

Interlock
Solenoid de-energised

Four hole mounting
152,4mm x 76,2mm (6“ x 3“)

M-operator module
88 x 88 mm escutcheon

603M1 (IP55)

Complete switch	Poles	Product lines	Rated data (IEC 60947) Operational current I_e AC-21A A	Operational power at 380–440 V AC-23A kW	AC-3 kW	Order code number
Rotary Cam Switches	1 ... 24	S600	80	45	30	**S606 - 61 ... - 603M1**
Switching angle 60°			100	55	37	**S608 - 61 ... - 603M1**
padlockable in 60° steps			160	75	45	**S612 - 61 ... - 603M1**

SMD modules for basic switch (A84)

Mounting form module for 603M1	S600	**BFA6-003**
Interlock module, mounting form 603M		**ZVS6-AC120/60**
M-operator module 88 x 88 mm, mounting form 603M1 Starting position of the handle 09h Escutcheon black, handle black		**6AM1**
M-operator module 88 x 88 mm, mounting form 603M1 Starting position of the handle 12h Escutcheon black, handle black		**6BM1**
Legend plate silver, operator module 603M1		**FAS6 - ....** (FA number)

Dimensions (mm)

Type	A	B1	B2	B3	B4	B5	C1	D	D1	D2	D3	E	L*)	each add. stage
S606	88	152,4	170	76,2	205	150	52	210	20	5,5	5,5	68	59	22
S608	88	152,4	170	76,2	205	150	52	210	20	5,5	5,5	68	66	26
S612	88	152,4	170	76,2	205	150	52	210	20	5,5	5,5	68	72	32

L*) Dimension for switch with 1 contact stage

Front mounting switch

Available upon request

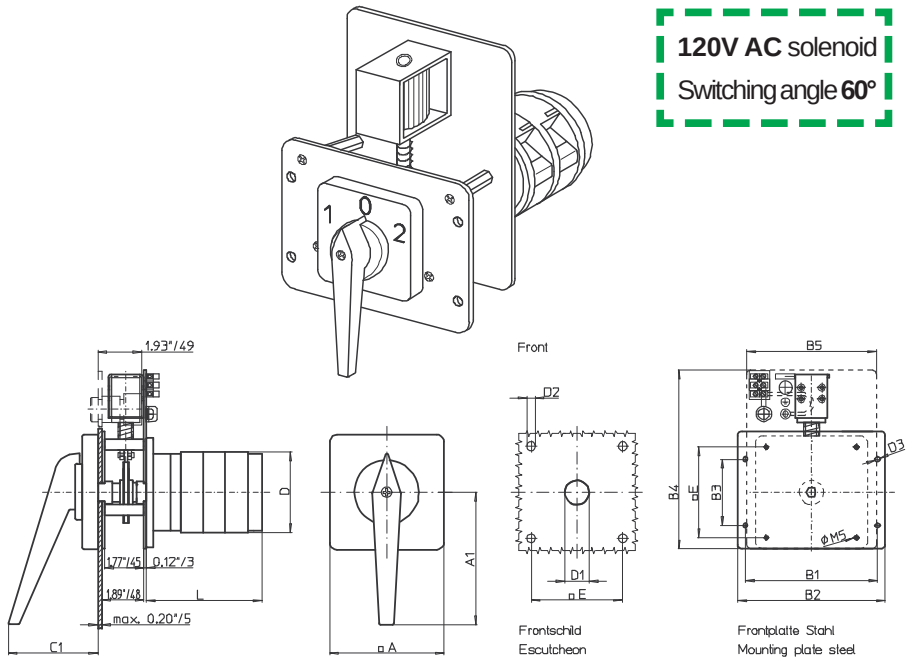

Product line
S600

Front mounting switch
Solenoid lock device
Solenoid 120V AC

Interlock
Solenoid de-energised

Four hole mounting
152,4mm x 76,2mm (6“ x 3“)

G-operator module
88 x 88 mm escutcheon

603G1 (IP55)

Complete switch	Poles	Product lines	Rated data (IEC 60947) Operational current I_e AC-21A A	Operational power at 380–440 V AC-23A kW	AC-3 kW	Order code number
Rotary Cam Switches Switching angle 60° padlockable in 60° steps	1 ... 24	S600	80 100 160	45 55 75	30 37 45	**S606 - 61 ... - 603G1** **S608 - 61 ... - 603G1** **S612 - 61 ... - 603G1**

SMD modules for basic switch (A84)

Mounting form module for 603G1	S600	**BFA6-003**
Interlock module, mounting form 603G1		**ZVS6-AC120/60**
G-operator module 88 x 88 mm, mounting form 603G1 Starting position of the handle 09h Escutcheon black, handle black		**6AG1**
G-operator module 88 x 88 mm, mounting form 603G1 Starting position of the handle 12h Escutcheon black, handle black		**6BG1**
Legend plate silver, operator module 603G1		**FAS6 - ....** (FA number)

Dimensions (mm)

Type	A	A1	B1	B2	B3	B4	B5	C1	D	D1	D2	D3	E	L*)	each add. stage
S606	88	86	152,4	170	76,2	205	150	74	210	20	5,5	5,5	68	59	22
S608	88	86	152,4	170	76,2	205	150	74	210	20	5,5	5,5	68	66	26
S612	88	86	152,4	170	76,2	205	150	74	210	20	5,5	5,5	68	72	32

L*) Dimension for switch with 1 contact stage

Front mounting switch

Available upon request

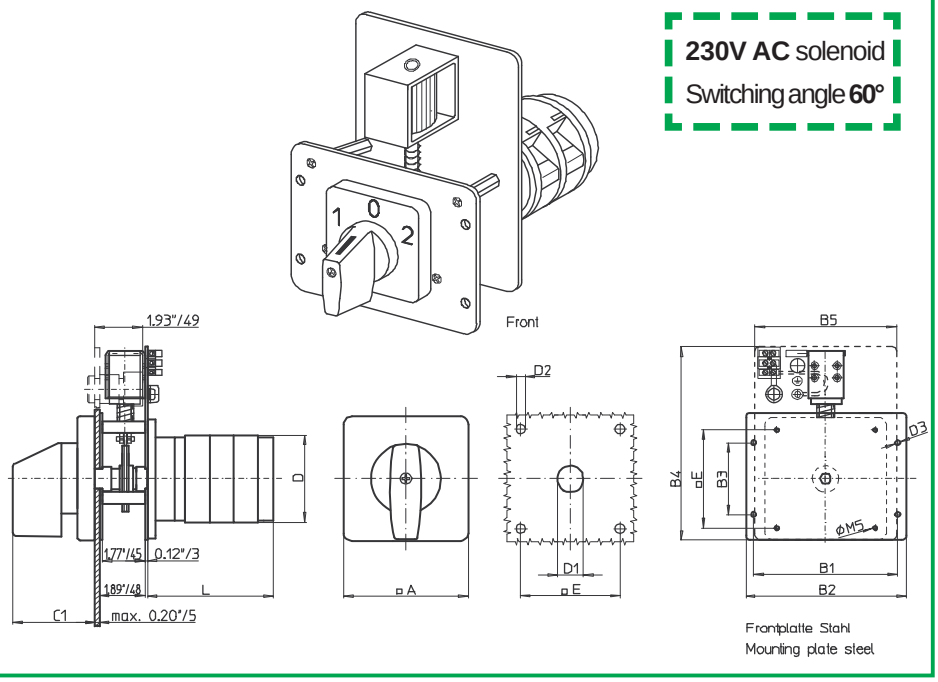

Product line
S600

Front mounting switch
Solenoid lock device
Solenoid 230V AC

Interlock
Solenoid de-energised

Four hole mounting
152,4mm x 76,2mm (6“ x 3“)

M-operator module
88 x 88 mm escutcheon

604M1 (IP55)

Complete switch	Poles	Product lines	Rated data (IEC 60947) Operational current I_e AC-21A A	Operational power at 380–440 V AC-23A kW	AC-3 kW	Order code number
Rotary Cam Switches	1 ... 24	S600	80	45	30	**S606 - 61 ... - 604M1**
Switching angle 60°			100	55	37	**S608 - 61 ... - 604M1**
padlockable in 60° steps			160	75	45	**S612 - 61 ... - 604M1**

SMD modules for basic switch (A84)

Mounting form module for 604M1	S600	**BFA6-003**
Interlock module, mounting form 604M1		**ZVS6-AC230/60**
M-operator module 88 x 88 mm, mounting form 604M1 Starting position of the handle 09h Escutcheon black, handle black		**6AM1**
M-operator module 88 x 88 mm, mounting form 604M1 Starting position of the handle 12h Escutcheon black, handle black		**6BM1**
Legend plate silver, operator module 604M1		**FAS6 - ....** (FA number)

Dimensions (mm)

Type	A	B1	B2	B3	B4	B5	C1	D	D1	D2	D3	E	L*)	each add. stage
S606	88	152,4	170	76,2	205	150	52	210	20	5,5	5,5	68	59	22
S608	88	152,4	170	76,2	205	150	52	210	20	5,5	5,5	68	66	26
S612	88	152,4	170	76,2	205	150	52	210	20	5,5	5,5	68	72	32

L*) Dimension for switch with 1 contact stage

Front mounting switch

Available upon request

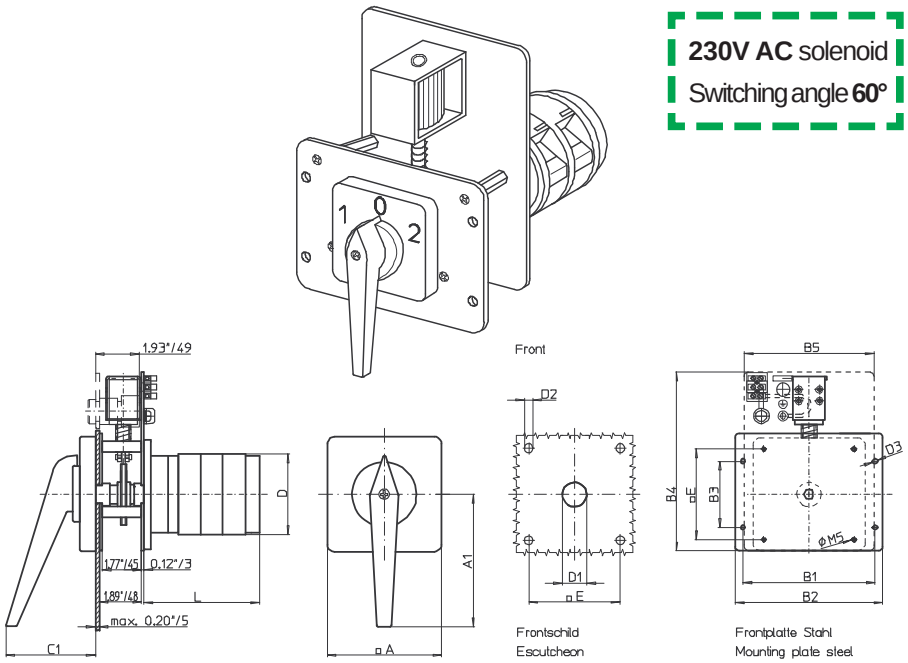

230V AC solenoid
Switching angle **60°**

Product line
S600

Front mounting switch
Solenoid lock device
Solenoid 230V AC

Interlock
Solenoid de-energised

Four hole mounting
152,4mm x 76,2mm (6“ x 3“)

G-operator module
88 x 88 mm escutcheon

604G1 (IP55)

Complete switch	Poles	Product lines	Rated data (IEC 60947) Operational current I_e AC-21A A	Operational power at 380–440 V AC-23A kW	AC-3 kW	Order code number
Rotary Cam Switches	1 ... 24	S600	80	45	30	**S606 - 61 ... - 604G1**
Switching angle 60°			100	55	37	**S608 - 61 ... - 604G1**
padlockable in 60° steps			160	75	45	**S612 - 61 ... - 604G1**

SMD modules for basic switch (A84)

Mounting form module for 604G1	S600	**BFA6-003**
Interlock module, mounting form 604G1		**ZVS6-AC230/60**
G-operator module 88 x 88 mm, mounting form 604G1 Starting position of the handle 09h Escutcheon black, handle black		**6AG1**
G-operator module 88 x 88 mm, mounting form 604G1 Starting position of the handle 12h Escutcheon black, handle black		**6BG1**
Legend plate silver, operator module 604G1		**FAS6 - ....** (FA number)

Dimensions (mm)

Type	A	A1	B1	B2	B3	B4	B5	C1	D	D1	D2	D3	E	L*)	each add. stage
S606	88	86	152,4	170	76,2	205	150	74	210	20	5,5	5,5	68	59	22
S608	88	86	152,4	170	76,2	205	150	74	210	20	5,5	5,5	68	66	26
S612	88	86	152,4	170	76,2	205	150	74	210	20	5,5	5,5	68	72	32

L*) Dimension for switch with 1 contact stage

Front mounting switch

For US market only

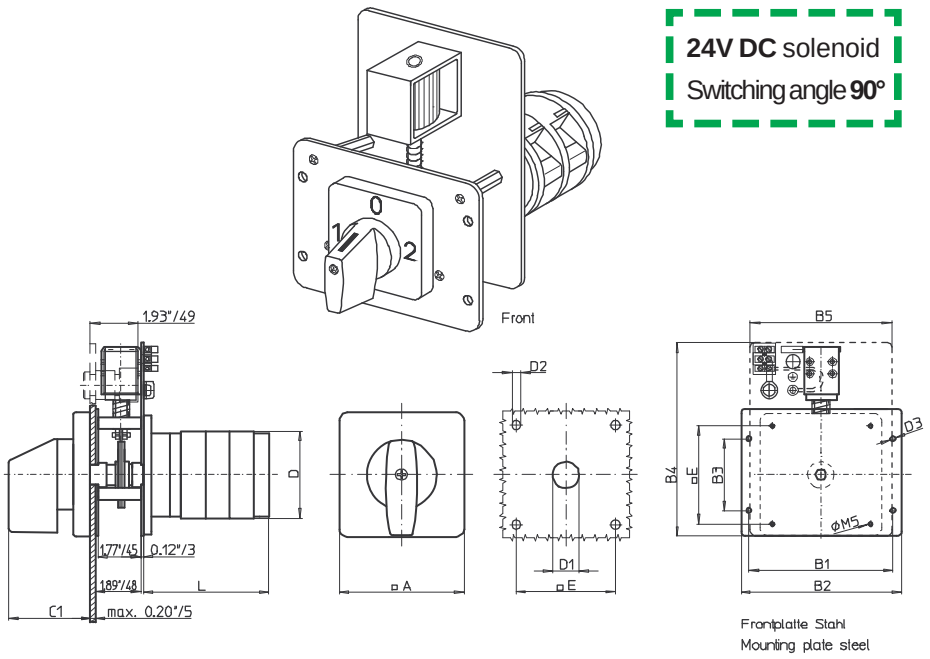

Product line
S600

Front mounting switch
Solenoid lock device
Solenoid 24V DC

Interlock
Solenoid de-energised

Four hole mounting
152,4mm x 76,2mm (6“ x 3“)

M-operator module
88 x 88 mm escutcheon

607M1 (IP55)

Complete switch	Poles	Product lines	Rated data (IEC 60947) Operational current I_e AC-21A A	Operational power at 380–440 V AC-23A kW	AC-3 kW	Order code number
Rotary Cam Switches Switching angle 90° padlockable in 90° steps	1 ... 24	S600	80 100 160	45 55 75	30 37 45	**S606 - 61 ... - 607M1** **S608 - 61 ... - 607M1** **S612 - 61 ... - 607M1**

SMD modules for basic switch (A84)

Mounting form module for 607M1 Interlock module, mounting form 607M1	S600	**BFA6-003** **ZVS6-DC024/90**
M-operator module 88 x 88 mm, mounting form 607M1 Starting position of the handle 09h Escutcheon black, handle black		**6AM1**
M-operator module 88 x 88 mm, mounting form 607M1 Starting position of the handle 12h Escutcheon black, handle black		**6BM1**
Legend plate silver, operator module 607M1		**FAS6 - ....** (FA number)

Dimensions (mm)

Type	A	B1	B2	B3	B4	B5	C1	D	D1	D2	D3	E	L*)	each add. stage
S606	88	152,4	170	76,2	205	150	52	210	20	5,5	5,5	68	59	22
S608	88	152,4	170	76,2	205	150	52	210	20	5,5	5,5	68	66	26
S612	88	152,4	170	76,2	205	150	52	210	20	5,5	5,5	68	72	32

L*) Dimension for switch with 1 contact stage

Front mounting switch

For US market only

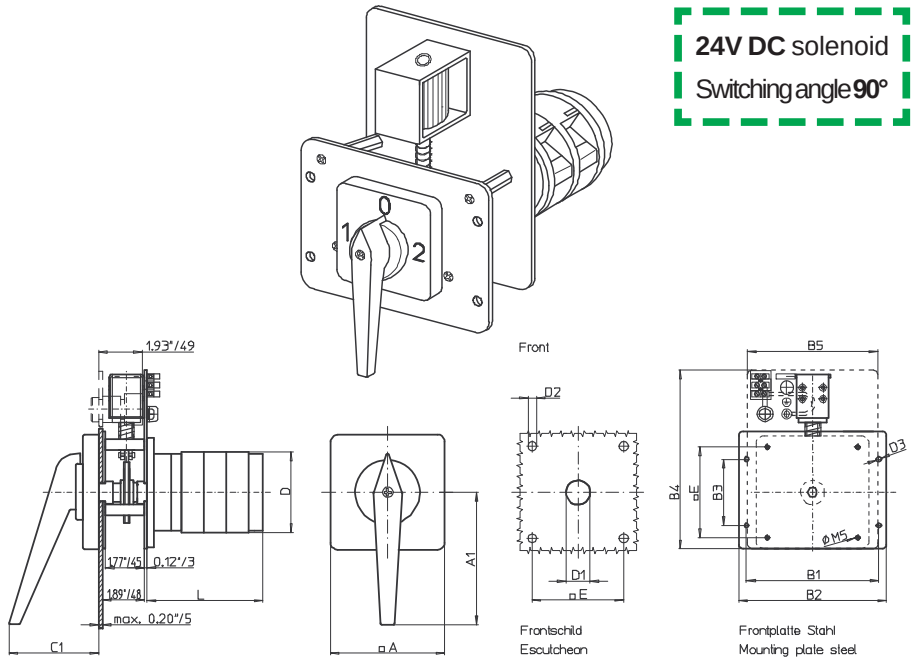

Product line
S600

Front mounting switch
Solenoid lock device
Solenoid 24V DC

Interlock
Solenoid de-energised

Four hole mounting
152,4mm x 76,2mm (6“ x 3“)

G-operator module
88 x 88 mm escutcheon

607G1 (IP55)

Complete switch	Poles	Product lines	Rated data (IEC 60947) Operational current I_e AC-21A A	Operational power at 380–440 V AC-23A kW	AC-3 kW	Order code number
Rotary Cam Switches Switching angle 90° padlockable in 90° steps	1 ... 24	S600	80 100 160	45 55 75	30 37 45	**S606 - 61 ... - 607G1** **S608 - 61 ... - 607G1** **S612 - 61 ... - 607G1**

SMD modules for basic switch (A84)

Mounting form module for 607G1	S600	**BFA6-003**
Interlock module, mounting form 607G1		**ZVS6-DC024/90**
G-operator module 88 x 88 mm, mounting form 607G1 Starting position of the handle 09h Escutcheon black, handle black		**6AG1**
G-operator module 88 x 88 mm, mounting form 607G1 Starting position of the handle 12h Escutcheon black, handle black		**6BG1**
Legend plate silver, operator module 607G1		**FAS6 - ....** (FA number)

Dimensions (mm)

Type	A	A1	B1	B2	B3	B4	B5	C1	D	D1	D2	D3	E	L*)	each add. stage
S606	88	86	152,4	170	76,2	205	150	66	210	20	5,5	5,5	68	59	22
S608	88	86	152,4	170	76,2	205	150	66	210	20	5,5	5,5	68	66	26
S612	88	86	152,4	170	76,2	205	150	66	210	20	5,5	5,5	68	72	32

L*) Dimension for switch with 1 contact stage

Front mounting switch

Available upon request

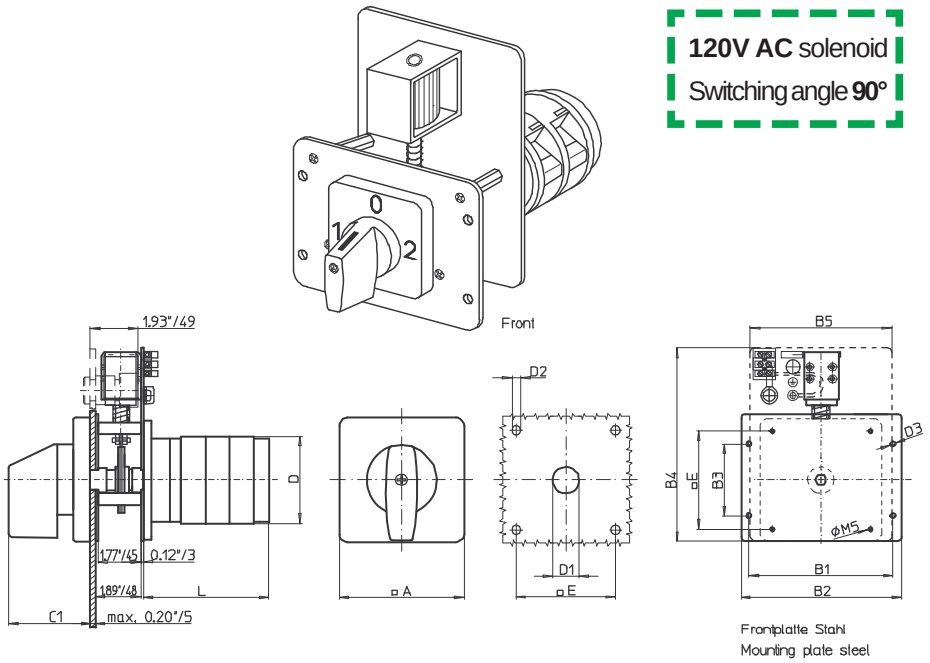

Product line
S600

Front mounting switch
Solenoid lock device
Solenoid 120V AC

Interlock
Solenoid de-energised

Four hole mounting
152,4mm x 76,2mm (6“ x 3“)

M-operator module
88 x 88 mm escutcheon

608M1 (IP55)

Complete switch	Poles	Product lines	Rated data (IEC 60947) Operational current I_e AC-21A A	Operational power at 380–440 V AC-23A kW	AC-3 kW	Order code number
Rotary Cam Switches	1 ... 24	S600	80	45	30	**S606 - 61 ... - 608M1**
Switching angle 90°			100	55	37	**S608 - 61 ... - 608M1**
padlockable in 90° steps			160	75	45	**S612 - 61 ... - 608M1**

SMD modules for basic switch (A84)

Mounting form module for 608M1	S600	**BFA6-003**
Interlock module, mounting form 608M1		**ZVS6-AC120/90**
M-operator module 88 x 88 mm, mounting form 608M1 Starting position of the handle 09h Escutcheon black, handle black		**6AM1**
M-operator module 88 x 88 mm, mounting form 608M1 Starting position of the handle 12h Escutcheon black, handle black		**6BM1**
Legend plate silver, operator module 608M1		**FAS6 - ....** (FA number)

Dimensions (mm)

Type	A	B1	B2	B3	B4	B5	C1	D	D1	D2	D3	E	L*)	each add. stage
S606	88	152,4	170	76,2	205	150	52	210	20	5,5	5,5	68	59	22
S608	88	152,4	170	76,2	205	150	52	210	20	5,5	5,5	68	66	26
S612	88	152,4	170	76,2	205	150	52	210	20	5,5	5,5	68	72	32

L*) Dimension for switch with 1 contact stage

Front mounting switch

Available upon request

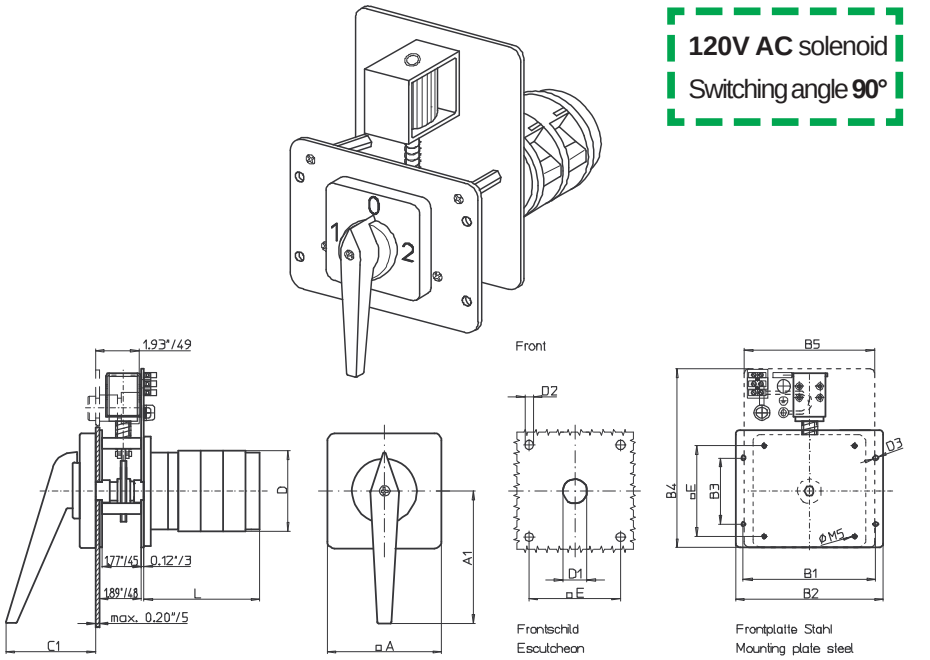

Product line
S600

Front mounting switch
Solenoid lock device
Solenoid 120V AC

Interlock
Solenoid de-energised

Four hole mounting
152,4mm x 76,2mm (6“ x 3“)

G-operator module
88 x 88 mm escutcheon

608G1 (IP55)

Complete switch	Poles	Product lines	Rated data (IEC 60947) Operational current I_e AC-21A A	Operational power at 380–440 V AC-23A kW	AC-3 kW	Order code number
Rotary Cam Switches Switching angle 90° padlockable in 90° steps	1 ... 24	S600	80 100 160	45 55 75	30 37 45	**S606 - 61 ... - 608G1** **S608 - 61 ... - 608G1** **S612 - 61 ... - 608G1**

SMD modules for basic switch (A84)

Mounting form module for 608G1 Interlock module, mounting form 608G1	S600	**BFA6-003** **ZVS6-AC120/90**
G-operator module 88 x 88 mm, mounting form 608G1 Starting position of the handle 09h Escutcheon black, handle black		**6AG1**
G-operator module 88 x 88 mm, mounting form 608G1 Starting position of the handle 12h Escutcheon black, handle black		**6BG1**
Legend plate silver, operator module 608G1		**FAS6 - ....** (FA number)

Dimensions (mm)

Type	A	A1	B1	B2	B3	B4	B5	C1	D	D1	D2	D3	E	L*)	each add. stage
S606	88	86	152,4	170	76,2	205	150	74	210	20	5,5	5,5	68	59	22
S608	88	86	152,4	170	76,2	205	150	74	210	20	5,5	5,5	68	66	26
S612	88	86	152,4	170	76,2	205	150	74	210	20	5,5	5,5	68	72	32

L*) Dimension for switch with 1 contact stage

Front mounting switch

Available upon request

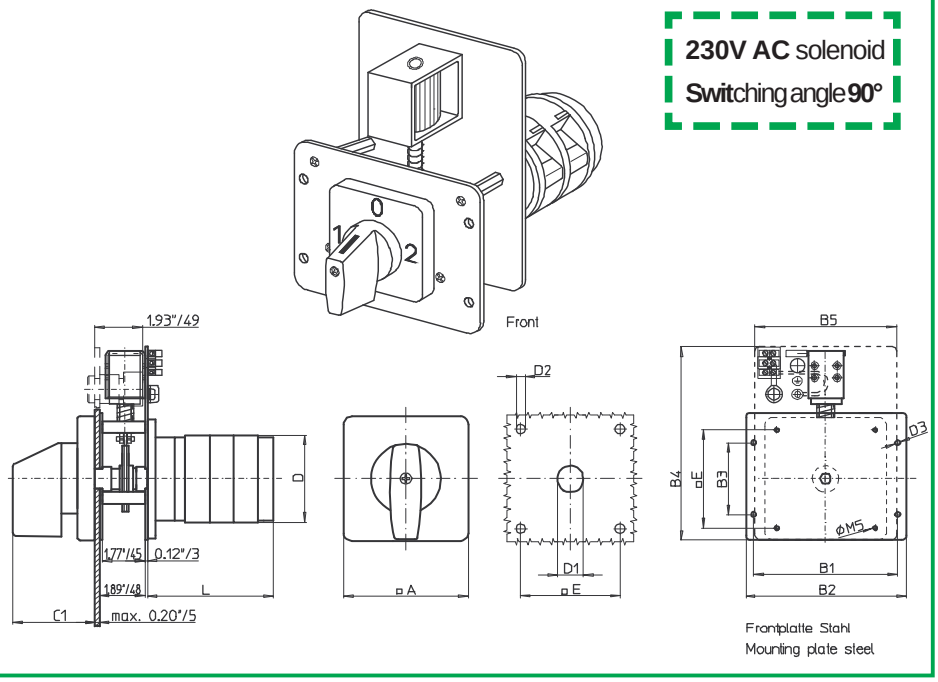

Product line
S600

Front mounting switch
Solenoid lock device
Solenoid 230V AC

Interlock
Solenoid de-energised

Four hole mounting
152,4mm x 76,2mm (6“ x 3“)

M-operator module
88 x 88 mm escutcheon

609M1 (IP55)

Complete switch	Poles	Product lines	Rated data (IEC 60947) Operational current I_e AC-21A A	Operational power at 380–440 V AC-23A kW	AC-3 kW	Order code number
Rotary Cam Switches	1 ... 24	S600	80	45	30	**S606 - 61 ... - 609M1**
Switching angle 90°			100	55	37	**S608 - 61 ... - 609M1**
padlockable in 90° steps			160	75	45	**S612 - 61 ... - 609M1**

SMD modules for basic switch (A84)

Mounting form module for 609M1	S600	**BFA6-003**
Interlock module, mounting form 609M1		**ZVS6-AC230/90**
M-operator module 88 x 88 mm, mounting form 609M1 Starting position of the handle 09h Escutcheon black, handle black		**6AM1**
M-operator module 88 x 88 mm, mounting form 609M1 Starting position of the handle 12h Escutcheon black, handle black		**6BM1**
Legend plate silver, operator module 609M1		**FAS6 - ....** (FA number)

Dimensions (mm)

Type	A	B1	B2	B3	B4	B5	C1	D	D1	D2	D3	E	L*)	each add. stage
S606	88	152,4	170	76,2	205	150	52	210	20	5,5	5,5	68	59	22
S608	88	152,4	170	76,2	205	150	52	210	20	5,5	5,5	68	66	26
S612	88	152,4	170	76,2	205	150	52	210	20	5,5	5,5	68	72	32

L*) Dimension for switch with 1 contact stage

Front mounting switch

Available upon request

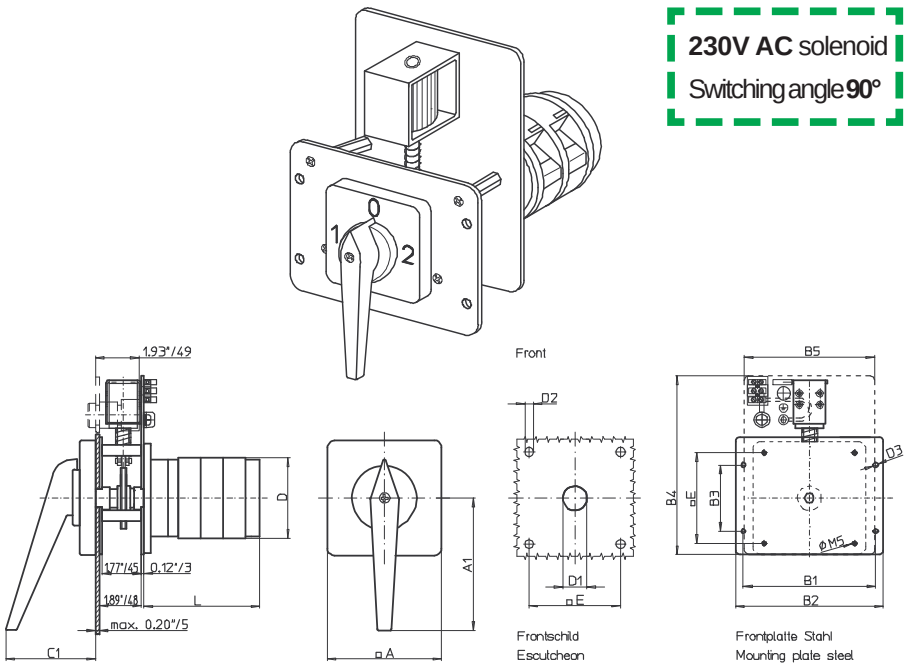

Product line
S600

Front mounting switch
Solenoid lock device
Solenoid 230V AC

Interlock
Solenoid de-energised

Four hole mounting
152,4mm x 76,2mm (6“ x 3“)

G-operator module
88 x 88 mm escutcheon

609G1 (IP55)

Complete switch	Poles	Product lines	Rated data (IEC 60947) Operational current I_e AC-21A A	Operational power at 380–440 V AC-23A kW	AC-3 kW	Order code number
Rotary Cam Switches	1 ... 24	S600	80	45	30	**S606 - 61 ... - 609G1**
Switching angle 90°			100	55	37	**S608 - 61 ... - 609G1**
padlockable in 90° steps			160	75	45	**S612 - 61 ... - 609G1**

SMD modules for basic switch (A84)

Mounting form module for 609G1	S600	**BFA6-003**
Interlock module, mounting form 609G1		**ZVS6-AC230/90**
G-operator module 88 x 88 mm, mounting form 609G1 Starting position of the handle 09h Escutcheon black, handle black		**6AG1**
G-operator module 88 x 88 mm, mounting form 609G1 Starting position of the handle 12h Escutcheon black, handle black		**6BG1**
Legend plate silver, operator module 609G1		**FAS6 - ....** (FA number)

Dimensions (mm)

Type	A	A1	B1	B2	B3	B4	B5	C1	D	D1	D2	D3	E	L*)	each add. stage
S606	88	86	152,4	170	76,2	205	150	74	210	20	5,5	5,5	68	59	22
S608	88	86	152,4	170	76,2	205	150	74	210	20	5,5	5,5	68	66	26
S612	88	86	152,4	170	76,2	205	150	74	210	20	5,5	5,5	68	72	32

L*) Dimension for switch with 1 contact stage

Front mounting switch

For US market only

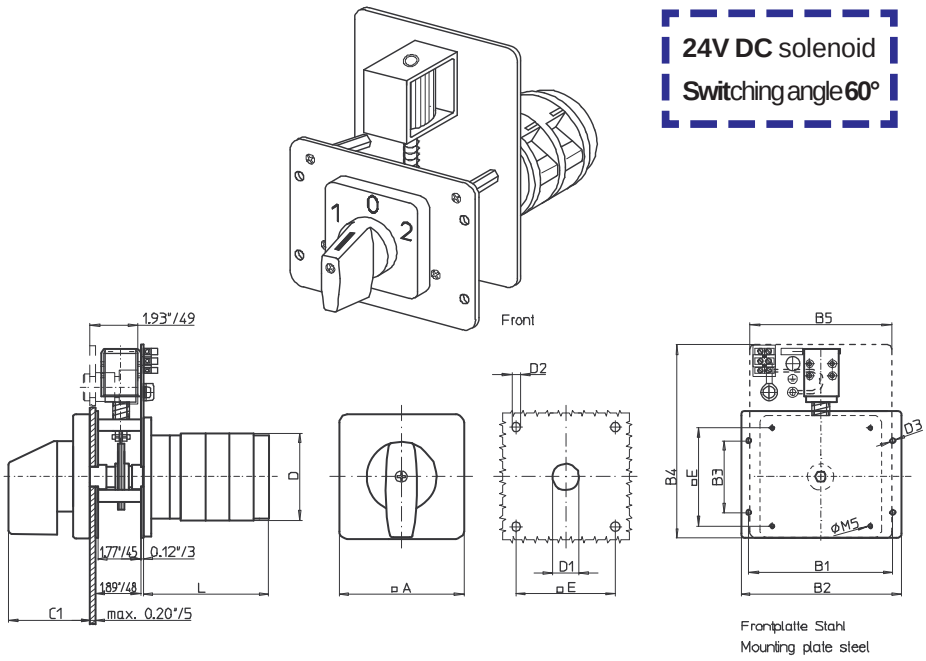

24V DC solenoid
Switching angle 60°

Product line
S600

Front mounting switch
Solenoid lock device
Solenoid 24V DC

Interlock
Solenoid energised

Four hole mounting
152,4mm x 76,2mm (6“ x 3“)

M-operator module
88 x 88 mm escutcheon

612M1 (IP55)

Complete switch	Poles	Product lines	Rated data (IEC 60947) Operational current I_e AC-21A A	Operational power at 380–440 V AC-23A kW	AC-3 kW	Order code number
Rotary Cam Switches Switching angle 60° padlockable in 60° steps	1 ... 24	S600	80 100 160	45 55 75	30 37 45	**S606 - 61 ... - 612M1** **S608 - 61 ... - 612M1** **S612 - 61 ... - 612M1**

SMD modules for basic switch (A84)

Mounting form module for 612M1 Interlock module, mounting form 612M1	S600	**BFA6-003** **ZVD6-DC024/60**
M-operator module 88 x 88 mm, mounting form 612M1 Starting position of the handle 09h Escutcheon black, handle black		**6AM1**
M-operator module 88 x 88 mm, mounting form 612M1 Starting position of the handle 12h Escutcheon black, handle black		**6BM1**
Legend plate silver, operator module 612M1		**FAS6 - ....** (FA number)

Dimensions (mm)

Type	A	B1	B2	B3	B4	B5	C1	D	D1	D2	D3	E	L*)	each add. stage
S606	88	152,4	170	76,2	205	150	52	210	20	5,5	5,5	68	59	22
S608	88	152,4	170	76,2	205	150	52	210	20	5,5	5,5	68	66	26
S612	88	152,4	170	76,2	205	150	52	210	20	5,5	5,5	68	72	32

L*) Dimension for switch with 1 contact stage

Front mounting switch

For US market only

sälzer

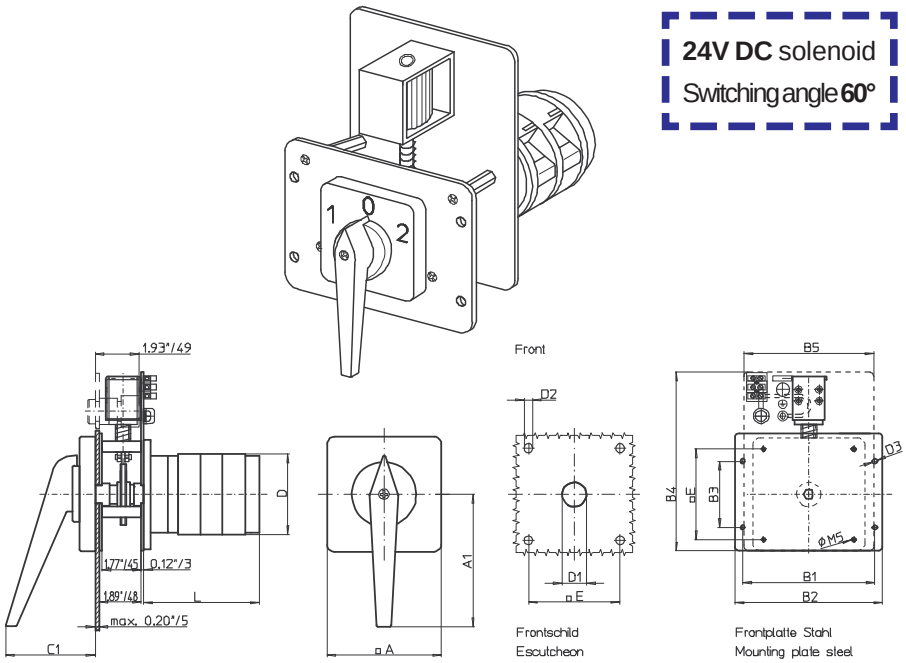

Product line
S600

Front mounting switch
Solenoid lock device
Solenoid 24V DC

Interlock
Solenoid energised

Four hole mounting
152,4mm x 76,2mm (6“ x 3“)

G-operator module
88 x 88 mm escutcheon

612G1 (IP55)

Complete switch	Poles	Product lines	Rated data (IEC 60947) Operational current I_e AC-21A A	Operational power at 380–440 V AC-23A kW	AC-3 kW	Order code number
Rotary Cam Switches Switching angle 60° padlockable in 60° steps	1 ... 24	S600	80 100 160	45 55 75	30 37 45	**S606 - 61 ... - 612G1** **S608 - 61 ... - 612G1** **S612 - 61 ... - 612G1**

SMD modules for basic switch (A84)

Mounting form module for 612G1 Interlock module, mounting form 612G1	S600	**BFA6-003** **ZVD6-DC024/60**
G-operator module 88 x 88 mm, mounting form 612G1 Starting position of the handle 09h Escutcheon black, handle black		**6AG1**
G-operator module 88 x 88 mm, mounting form 612G1 Starting position of the handle 12h Escutcheon black, handle black		**6BG1**
Legend plate silver, operator module 612G1		**FAS6 - ....** (FA number)

Dimensions (mm)

Type	A	A1	B1	B2	B3	B4	B5	C1	D	D1	D2	D3	E	L*)	each add. stage
S606	88	86	152,4	170	76,2	205	150	74	210	20	5,5	5,5	68	59	22
S608	88	86	152,4	170	76,2	205	150	74	210	20	5,5	5,5	68	66	26
S612	88	86	152,4	170	76,2	205	150	74	210	20	5,5	5,5	68	72	32

L*) Dimension for switch with 1 contact stage

Front mounting switch

Available upon request

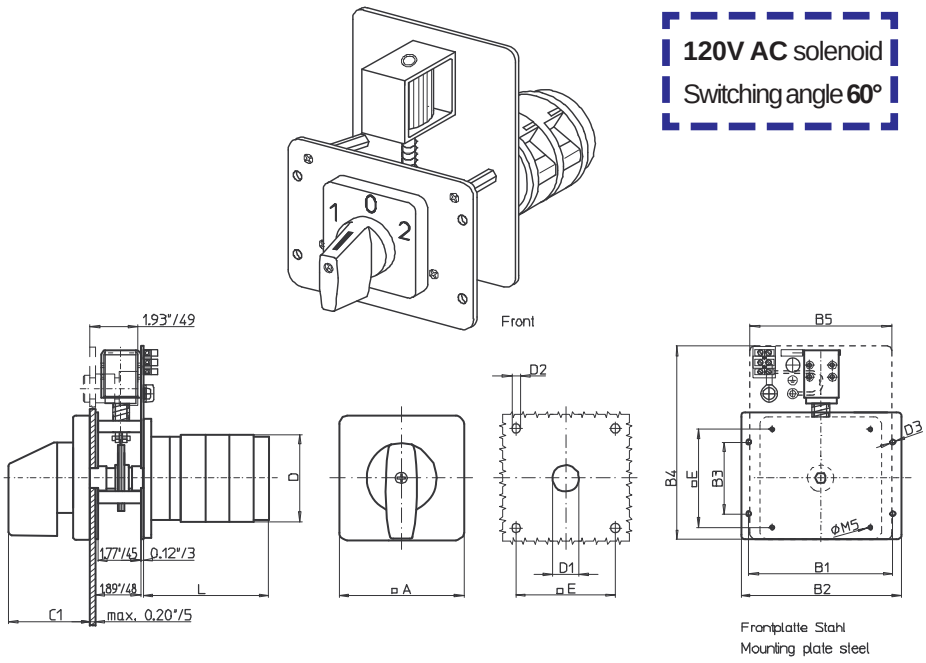

120V AC solenoid
Switching angle **60°**

Product line
S600

Front mounting switch
Solenoid lock device
Solenoid 120V AC

Interlock
Solenoid energised

Four hole mounting
152,4mm x 76,2mm (6“ x 3“)

M-operator module
88 x 88 mm escutcheon

613M1 (IP55)

Complete switch	Poles	Product lines	Rated data (IEC 60947) Operational current I_e AC-21A A	Operational power at 380–440 V AC-23A kW	AC-3 kW	Order code number
Rotary Cam Switches	1 ... 24	S600	80	45	30	**S606 - 61 ... - 613M1**
Switching angle 60°			100	55	37	**S608 - 61 ... - 613M1**
padlockable in 60° steps			160	75	45	**S612 - 61 ... - 613M1**

SMD modules for basic switch (A84)

Mounting form module for 613M1	S600	**BFA6-003**
Interlock module, mounting form 613M1		**ZVD6-AC120/60**
M-operator module 88 x 88 mm, mounting form 613M1 Starting position of the handle 09h Escutcheon black, handle black		**6AM1**
M-operator module 88 x 88 mm, mounting form 613M1 Starting position of the handle 12h Escutcheon black, handle black		**6BM1**
Legend plate silver, operator module 613M1		**FAS6 - ....** (FA number)

Dimensions (mm)

Type	A	B1	B2	B3	B4	B5	C1	D	D1	D2	D3	E	L*)	each add. stage
S606	88	152,4	170	76,2	205	150	52	210	20	5,5	5,5	68	59	22
S608	88	152,4	170	76,2	205	150	52	210	20	5,5	5,5	68	66	26
S612	88	152,4	170	76,2	205	150	52	210	20	5,5	5,5	68	72	32

L*) Dimension for switch with 1 contact stage

Front mounting switch

Available upon request

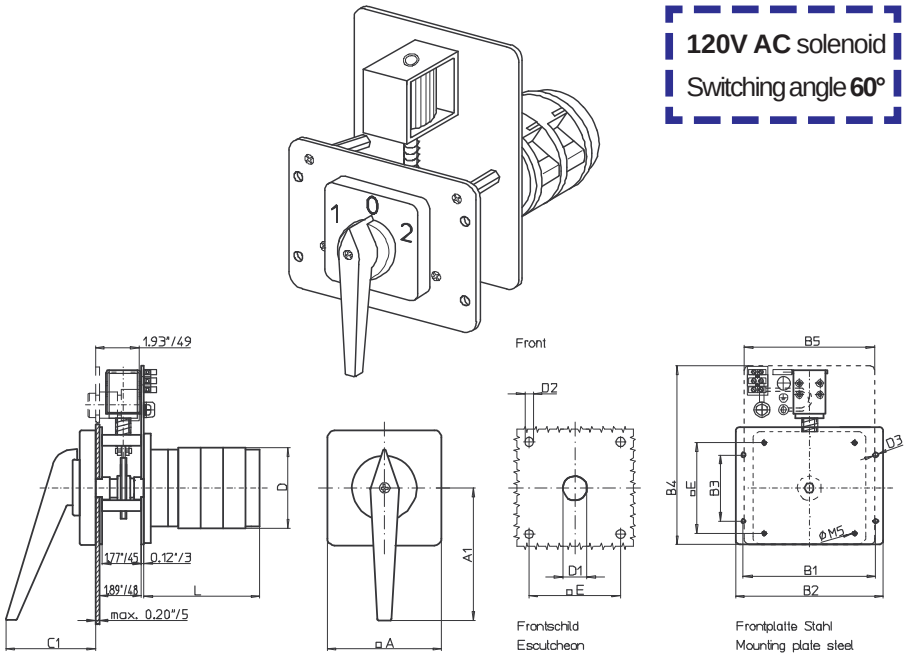

120V AC solenoid
Switching angle **60°**

Product line
S600

Front mounting switch
Solenoid lock device
Solenoid 120V AC

Interlock
Solenoid energised

Four hole mounting
152,4mm x 76,2mm (6“ x 3“)

G-operator module
88 x88 mm escutcheon

613G1 (IP55)

Complete switch	Poles	Product lines	Rated data (IEC 60947) Operational current I_e AC-21A A	Operational power at 380–440 V AC-23A kW	AC-3 kW	Order code number
Rotary Cam Switches Switching angle 60° padlockable in 60° steps	1 ... 24	S600	80 100 160	45 55 75	30 37 45	**S606 - 61 ... - 613G1** **S608 - 61 ... - 613G1** **S612 - 61 ... - 613G1**

SMD modules for basic switch (A84)

Mounting form module for 613G1 Interlock module, mounting form 613G1	S600	**BFA6-003** **ZVD6-AC120/60**
G-operator module 88 x 88 mm, mounting form 613G1 Starting position of the handle 09h Escutcheon black, handle black		**6AG1**
G-operator module 88 x 88 mm, mounting form 613G1 Starting position of the handle 12h Escutcheon black, handle black		**6BG1**
Legend plate silver, operator module 613G1		**FAS6 - ....** (FA number)

Dimensions (mm)

Type	A	A1	B1	B2	B3	B4	B5	C1	D	D1	D2	D3	E	L*)	each add. stage
S606	88	86	152,4	170	76,2	205	150	74	210	20	5,5	5,5	68	59	22
S608	88	86	152,4	170	76,2	205	150	74	210	20	5,5	5,5	68	66	26
S612	88	86	152,4	170	76,2	205	150	74	210	20	5,5	5,5	68	72	32

L*) Dimension for switch with 1 contact stage

Front mounting switch

Available upon request

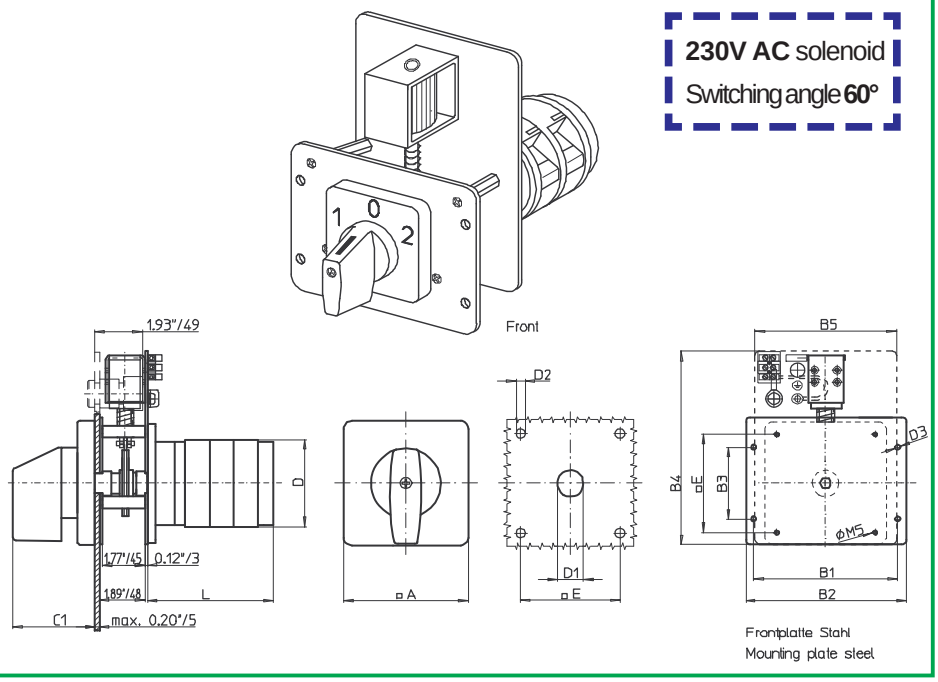

Product line
S600

Front mounting switch
Solenoid lock device
Solenoid 230V AC

Interlock
Solenoid energised

Four hole mounting
152,4mm x 76,2mm (6“ x 3“)

M-operator module
88 x 88 mm escutcheon

614M1 (IP55)

Complete switch	**Poles**	**Product lines**	**Rated data** (IEC 60947) Operational current I_e AC-21A A	Operational power at 380–440 V AC-23A kW	AC-3 kW	**Order code number**
Rotary Cam Switches	1 ... 24	S600	80	45	30	**S606 - 61 ... - 614M1**
Switching angle 60°			100	55	37	**S608 - 61 ... - 614M1**
padlockable in 60° steps			160	75	45	**S612 - 61 ... - 614M1**

SMD modules for basic switch (A84)

Mounting form module for 614M1	S600	**BFA6-003**
Interlock module, mounting form 614M1		**ZVD6-AC230/60**
M-operator module 88 x 88 mm, mounting form 614M1 Starting position of the handle 09h Escutcheon black, handle black		**6AM1**
M-operator module 88 x 88 mm, mounting form 614M1 Starting position of the handle 12h Escutcheon black, handle black		**6BM1**
Legend plate silver, operator module 614M1		**FAS6 - ....** (FA number)

Dimensions (mm)

Type	**A**	**B1**	**B2**	**B3**	**B4**	**B5**	**C1**	**D**	**D1**	**D2**	**D3**	**E**	**L*)**	**each add. stage**
S606	88	152,4	170	76,2	205	150	52	210	20	5,5	5,5	68	59	22
S608	88	152,4	170	76,2	205	150	52	210	20	5,5	5,5	68	66	26
S612	88	152,4	170	76,2	205	150	52	210	20	5,5	5,5	68	72	32

L*) Dimension for switch with 1 contact stage

Front mounting switch

Available upon request

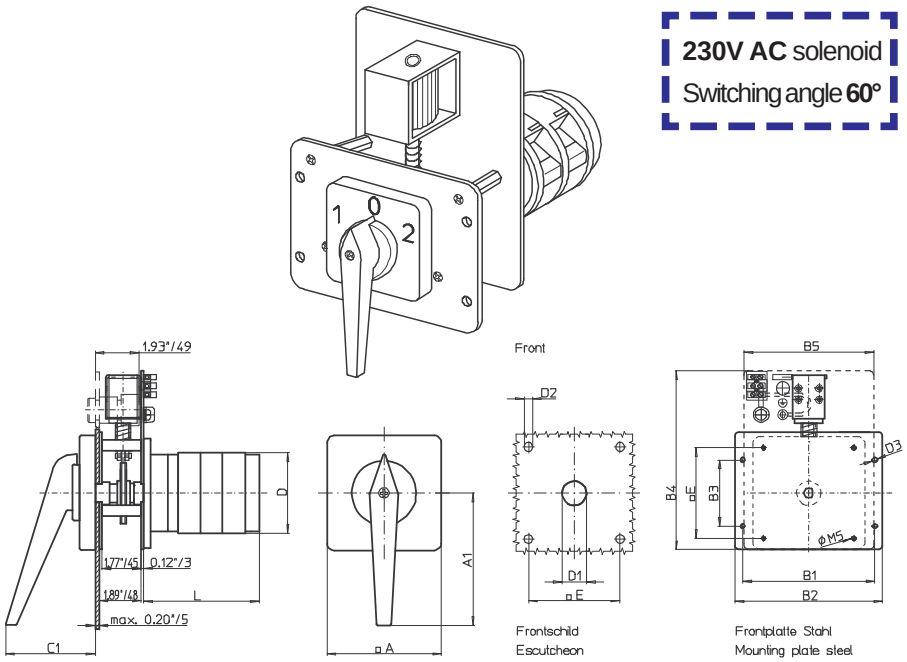

230V AC solenoid
Switching angle **60°**

Product line
S600

Front mounting switch
Solenoid lock device
Solenoid 230V AC

Interlock
Solenoid energised

Four hole mounting
152,4mm x 76,2mm (6“ x 3“)

G-operator module
88 x 88 mm escutcheon

614G1 (IP55)

Complete switch	Poles	Product lines	Rated data (IEC 60947) Operational current I_e AC-21A A	Operational power at 380–440 V AC-23A kW	AC-3 kW	Order code number
Rotary Cam Switches	1 ... 24	S600	80	45	30	**S606 - 61 ... - 614G1**
Switching angle 60°			100	55	37	**S608 - 61 ... - 614G1**
padlockable in 60° steps			160	75	45	**S612 - 61 ... - 614G1**

SMD modules for basic switch (A84)

Mounting form module for 614G1	S600	**BFA6-003**
Interlock module, mounting form 614G1		**ZVD6-AC230/60**
G-operator module 88 x 88 mm, mounting form 614G1 Starting position of the handle 09h Escutcheon black, handle black		**6AG1**
G-operator module 88 x 88 mm, mounting form 614G1 Starting position of the handle 12h Escutcheon black, handle black		**6BG1**
Legend plate silver, operator module 614G1		**FAS6 - ....** (FA number)

Dimensions (mm)

Type	A	A1	B1	B2	B3	B4	B5	C1	D	D1	D2	D3	E	L*)	each add. stage
S606	88	86	152,4	170	76,2	205	150	74	210	20	5,5	5,5	68	59	22
S608	88	86	152,4	170	76,2	205	150	74	210	20	5,5	5,5	68	66	26
S612	88	86	152,4	170	76,2	205	150	74	210	20	5,5	5,5	68	72	32

L*) Dimension for switch with 1 contact stage

Front mounting switch

For US market only

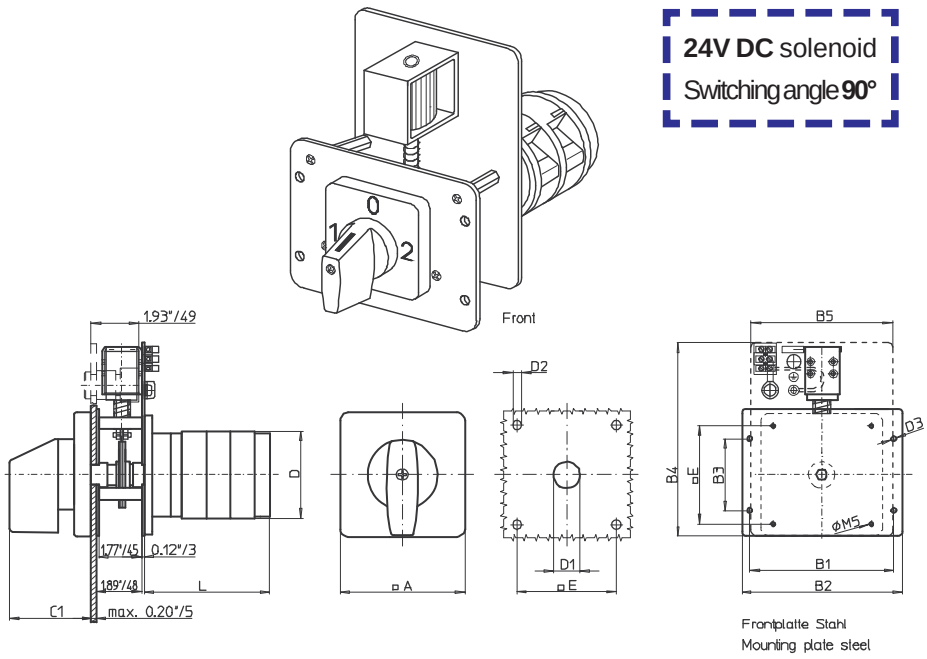

Product line
S600

Front mounting switch
Solenoid lock device
Solenoid 24V DC

Interlock
Solenoid energised

Four hole mounting
152,4mm x 76,2mm (6“ x 3“)

M-operator module
88 x 88 mm escutcheon

617M1 (IP55)

Complete switch	Poles	Product lines	Rated data (IEC 60947) Operational current I_e AC-21A A	Operational power at 380–440 V AC-23A kW	AC-3 kW	Order code number
Rotary Cam Switches	1 ... 24	S600	80	45	30	**S606 - 61 ... - 617M1**
Switching angle 90°			100	55	37	**S608 - 61 ... - 617M1**
padlockable in 90° steps			160	75	45	**S612 - 61 ... - 617M1**

SMD modules for basic switch (A84)

Mounting form module for 617M1	S600	**BFA6-003**
Interlock module, mounting form 617 M1		**ZVD6-DC024/90**
M-operator module 88 x 88 mm, mounting form 617M1 Starting position of the handle 09h Escutcheon black, handle black		**6AM1**
M-operator module 88 x 88 mm, mounting form 617M1 Starting position of the handle 12h Escutcheon black, handle black		**6BM1**
Legend plate silver, operator module 617M1		**FAS6 - ....** (FA number)

Dimensions (mm)

Type	A	B1	B2	B3	B4	B5	C1	D	D1	D2	D3	E	L*)	each add. stage
S606	88	152,4	170	76,2	205	150	52	210	20	5,5	5,5	68	59	22
S608	88	152,4	170	76,2	205	150	52	210	20	5,5	5,5	68	66	26
S612	88	152,4	170	76,2	205	150	52	210	20	5,5	5,5	68	72	32

L*) Dimension for switch with 1 contact stage

Front mounting switch

For US market only

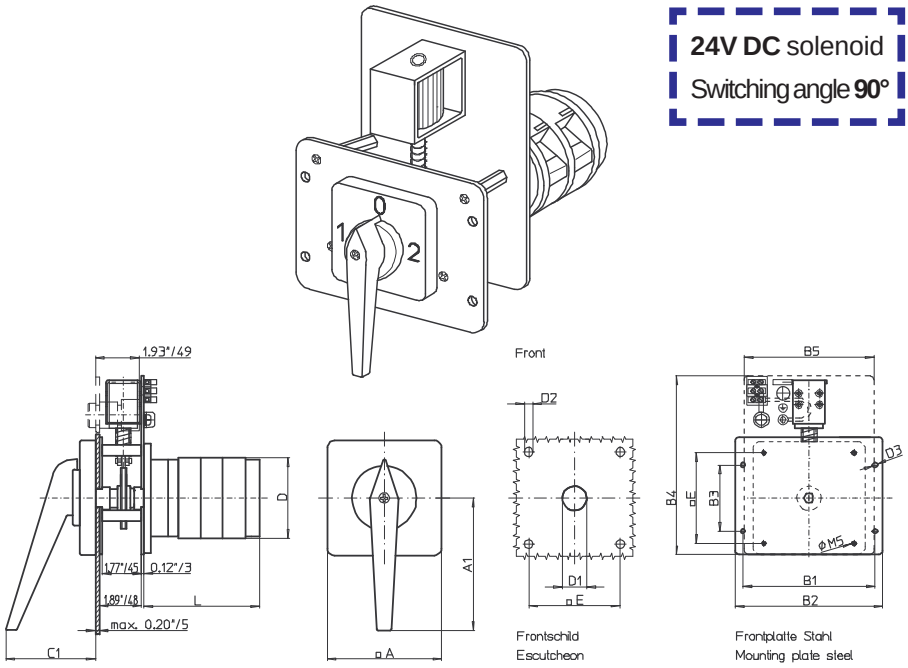

Product line
S600

Front mounting switch
Solenoid lock device
Solenoid 24V DC

Interlock
Solenoid energised

Four hole mounting
152,4mm x 76,2mm (6“ x 3“)

G-operator module
88 x 88 mm escutcheon

617G1 (IP55)

Complete switch	Poles	Product lines	Rated data (IEC 60947) Operational current I_e AC-21A A	Operational power at 380–440 V AC-23A kW	AC-3 kW	Order code number
Rotary Cam Switches	1 ... 24	S600	80	45	30	**S606 - 61 ... - 617G1**
Switching angle 90°			100	55	37	**S608 - 61 ... - 617G1**
padlockable in 90° steps			160	75	45	**S612 - 61 ... - 617G1**

SMD modules for basic switch (A84)

Mounting form module for 617G1	S600	**BFA6-003**
Interlock module, mounting form 617G1		**ZVD6-DC024/90**
G-operator module 88 x 88 mm, mounting form 617G1 Starting position of the handle 09h Escutcheon black, handle black		**6AG1**
G-operator module 88 x 88 mm, mounting form 617G1 Starting position of the handle 12h Escutcheon black, handle black		**6BG1**
Legend plate silver, operator module 617G1		**FAS6 - ....** (FA number)

Dimensions (mm)

Type	A	A1	B1	B2	B3	B4	B5	C1	D	D1	D2	D3	E	L*)	each add. stage
S606	88	86	152,4	170	76,2	205	150	66	210	20	5,5	5,5	68	59	22
S608	88	86	152,4	170	76,2	205	150	66	210	20	5,5	5,5	68	66	26
S612	88	86	152,4	170	76,2	205	150	66	210	20	5,5	5,5	68	72	32

L*) Dimension for switch with 1 contact stage

Front mounting switch

Available upon request

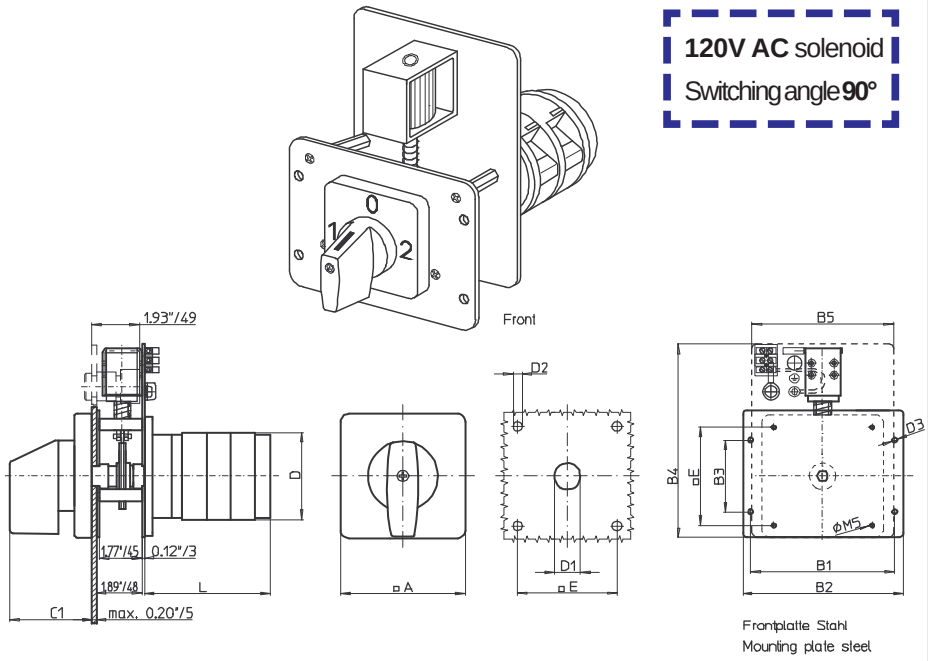

Product line
S600

Front mounting switch
Solenoid lock device
Solenoid 120V AC

Interlock
Solenoid energised

Four hole mounting
152,4mm x 76,2mm (6“ x 3“)

M-operator module
88 x 88 mm escutcheon

618M1 (IP55)

Complete switch	**Poles**	**Product lines**	**Rated data** (IEC 60947) Operational current I_e AC-21A A	Operational power at 380–440 V AC-23A kW	AC-3 kW	**Order code number**
Rotary Cam Switches	1 ... 24	S600	80	45	30	**S606 - 61 ... - 618M1**
Switching angle 90°			100	55	37	**S608 - 61 ... - 618M1**
padlockable in 90° steps			160	75	45	**S612 - 61 ... - 618M1**

SMD modules for basic switch (A84)

Mounting form module for 618M1	S600	**BFA6-003**
Interlock module, mounting form 618M1		**ZVD6-AC120/90**
M-operator module 88 x 88 mm, mounting form 618M1 Starting position of the handle 09h Escutcheon black, handle black		**6AM1**
M-operator module 88 x 88 mm, mounting form 618M1 Starting position of the handle 12h Escutcheon black, handle black		**6BM1**
Legend plate silver, operator module 618M1		**FAS6 - ....** (FA number)

Dimensions (mm)

Type	**A**	**B1**	**B2**	**B3**	**B4**	**B5**	**C1**	**D**	**D1**	**D2**	**D3**	**E**	**L*)**	**each add. stage**
S606	88	152,4	170	76,2	205	150	52	210	20	5,5	5,5	68	59	22
S608	88	152,4	170	76,2	205	150	52	210	20	5,5	5,5	68	66	26
S612	88	152,4	170	76,2	205	150	52	210	20	5,5	5,5	68	72	32

L*) Dimension for switch with 1 contact stage

Front mounting switch

Available upon request

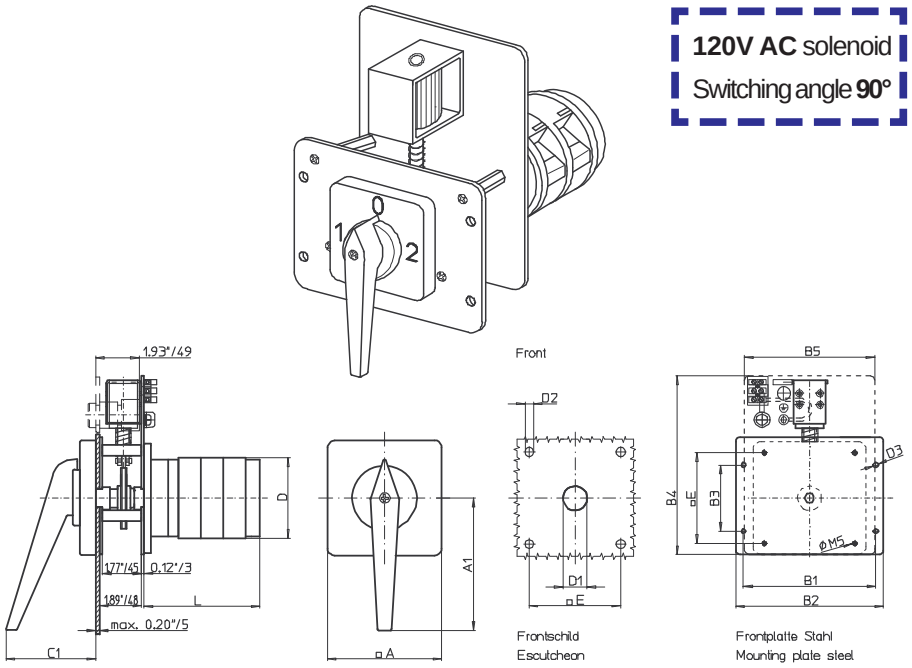

Product line
S600

Front mounting switch
Solenoid lock device
Solenoid 120V AC

Interlock
Solenoid energised

Four hole mounting
152,4mm x 76,2mm (6“ x 3“)

G-operator module
88 x 88 mm escutcheon

618G1 (IP55)

Complete switch	Poles	Product lines	Rated data (IEC 60947) Operational current I_e AC-21A A	Operational power at 380–440 V AC-23A kW	AC-3 kW	Order code number
Rotary Cam Switches	1 ... 24	S600	80	45	30	**S606 - 61 ... - 618G1**
Switching angle 90°			100	55	37	**S608 - 61 ... - 618G1**
padlockable in 90° steps			160	75	45	**S612 - 61 ... - 618G1**

SMD modules for basic switch (A84)

Mounting form module for 618G1	S600	**BFA6-003**
Interlock module, mounting form 618G1		**ZVD6-AC120/90**
G-operator module 88 x 88 mm, mounting form 618G1 Starting position of the handle 09h Escutcheon black, handle black		**6AG1**
G-operator module 88 x 88 mm, mounting form 618G1 Starting position of the handle 12h Escutcheon black, handle black		**6BG1**
Legend plate silver, operator module 618G1		**FAS6 - ....** (FA number)

Dimensions (mm)

Type	A	A1	B1	B2	B3	B4	B5	C1	D	D1	D2	D3	E	L*)	each add. stage
S606	88	86	152,4	170	76,2	205	150	74	210	20	5,5	5,5	68	59	22
S608	88	86	152,4	170	76,2	205	150	74	210	20	5,5	5,5	68	66	26
S612	88	86	152,4	170	76,2	205	150	74	210	20	5,5	5,5	68	72	32

L*) Dimension for switch with 1 contact stage

Front mounting switch

Available upon request

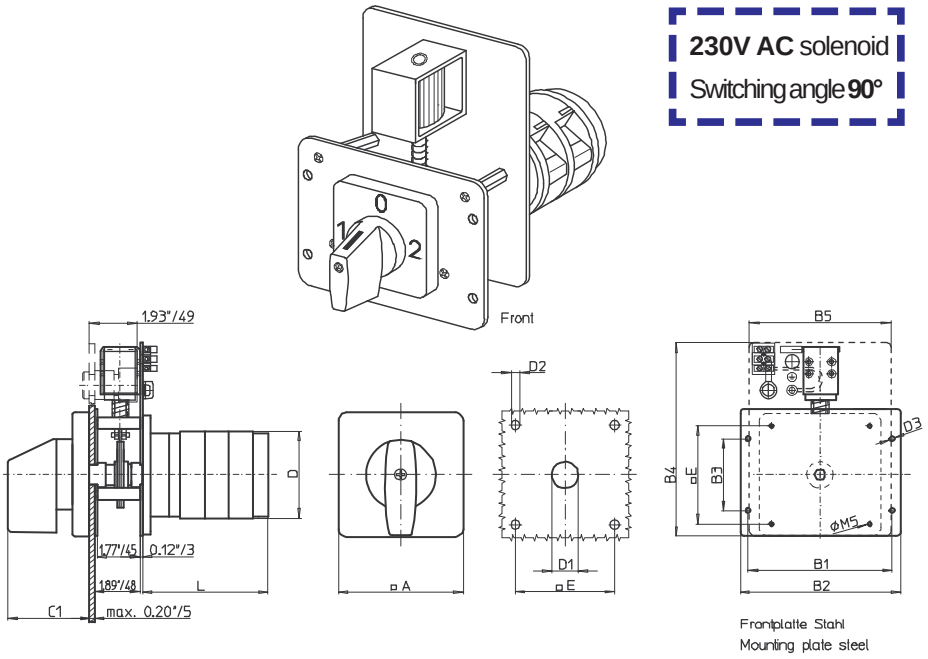

Product line
S600

Front mounting switch
Solenoid lock device
Solenoid 230V AC

Interlock
Solenoid energised

Four hole mounting
152,4mm x 76,2mm (6“ x 3“)

M-operator module
88 x 88 mm escutcheon

619M1 (IP55)

Complete switch	Poles	Product lines	Rated data (IEC 60947) Operational current I_e AC-21A A	Operational power at 380–440 V AC-23A kW	AC-3 kW	Order code number
Rotary Cam Switches	1 ... 24	S600	80	45	30	**S606 - 61 ... - 619M1**
Switching angle 90°			100	55	37	**S608 - 61 ... - 619M1**
padlockable in 90° steps			160	75	45	**S612 - 61 ... - 619M1**

SMD modules for basic switch (A84)

Mounting form module for 619M1	S600	**BFA6-003**
Interlock module, mounting form 619M1		**ZVD6-AC230/90**
M-operator module 88 x 88 mm, mounting form 619M1 Starting position of the handle 09h Escutcheon black, handle black		**6AM1**
M-operator module 88 x 88 mm, mounting form 619M1 Starting position of the handle 12h Escutcheon black, handle black		**6BM1**
Legend plate silver, operator module 619M1		**FAS6 - ....** (FA number)

Dimensions (mm)

Type	A	B1	B2	B3	B4	B5	C1	D	D1	D2	D3	E	L*)	each add. stage
S606	88	152,4	170	76,2	205	150	52	210	20	5,5	5,5	68	59	22
S608	88	152,4	170	76,2	205	150	52	210	20	5,5	5,5	68	66	26
S612	88	152,4	170	76,2	205	150	52	210	20	5,5	5,5	68	72	32

L*) Dimension for switch with 1 contact stage

Front mounting switch

Available upon request

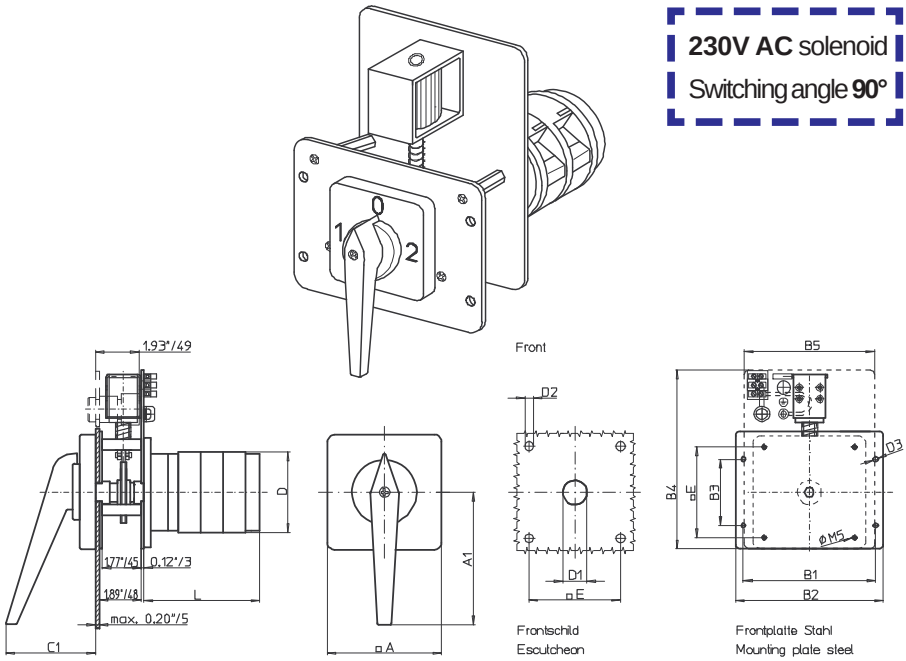

Product line
S600

Front mounting switch
Solenoid lock device
Solenoid 230V AC

Interlock
Solenoid energised

Four hole mounting
152,4mm x 76,2mm (6“ x 3“)

G-operator module
88 x 88 mm escutcheon

619G1 (IP55)

Complete switch	Poles	Product lines	Rated data (IEC 60947) Operational current I_e AC-21A A	Operational power at 380–440 V AC-23A kW	AC-3 kW	Order code number
Rotary Cam Switches	1 ... 24	S600	80	45	30	**S606 - 61 ... - 619G1**
Switching angle 90°			100	55	37	**S608 - 61 ... - 619G1**
padlockable in 90° steps			160	75	45	**S612 - 61 ... - 619G1**

SMD modules for basic switch (A84)

Mounting form module for 619G1	S600	**BFA6-003**
Interlock module, mounting form 619G1		**ZVD6-AC230/90**
G-operator module 88 x 88 mm, mounting form 619G1 Starting position of the handle 09h Escutcheon black, handle black		**6AG1**
G-operator module 88 x 88 mm, mounting form 619G1 Starting position of the handle 12h Escutcheon black, handle black		**6BG1**
Legend plate silver, operator module 619G1		**FAS6 - ....** (FA number)

Dimensions (mm)

Type	A	A1	B1	B2	B3	B4	B5	C1	D	D1	D2	D3	E	L*)	each add. stage
S606	88	86	152,4	170	76,2	205	150	74	210	20	5,5	5,5	68	59	22
S608	88	86	152,4	170	76,2	205	150	74	210	20	5,5	5,5	68	66	26
S612	88	86	152,4	170	76,2	205	150	74	210	20	5,5	5,5	68	72	32

L*) Dimension for switch with 1 contact stage

SMD Sälzer Modular Design

Section B

	Page from	to
Base/front mounting	B1-1	B1-3
Door clutch	B1-4	B1-8
Door clutch with door interlock	B1-9	B1-15

Originator: Sälzer Electric GmbH · Product Data Management (PDM) · 09306 Rochlitz (Germany)
Copyright reserved by Sälzer Electric GmbH. This document replaces all previous issues.
Valid until a new version is published. Changes and revisions reserved.

Base Mounting Switches

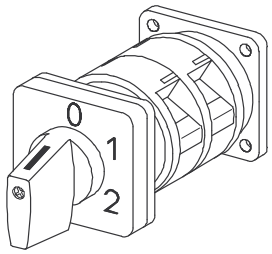

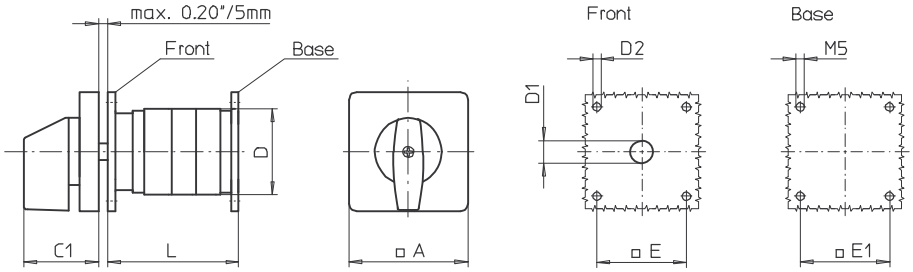

Product line
S600

Base mounting switch

Base/front mounting

Four hole mounting
68 x 68 mm front
68 x 68 mm base

M-operator module
88 x 88 mm escutcheon

002M1

Complete switch	**Poles**	**Product lines**	**Rated data** (IEC 60947) Operational current I_e AC-21A A	Operational power at 380–440 V AC-23A kW	AC-3 kW	**Order code number**
Rotary Cam Switches Switching angle 30°/45°/60°/90°	1 ... 24	S600	80 100 160	45 55 75	30 37 45	**S606 - 61 ... - 002M1** **S608 - 61 ... - 002M1** **S612 - 61 ... - 002M1**

SMD modules for basic switch (A33)

Mounting form module for 002M1	S600	**BFA6 - 002**
M-operator module 88 x 88 mm, mounting form 002M1 Starting position of the handle 09h Escutcheon black, handle black		**6AM1**
M-operator module 88 x 88 mm, mounting form 002M1 Starting position of the handle 12h Escutcheon black, handle black		**6BM1**
Legend plate silver, operator module 002M1		**FAS6 - ....** (FA number)

Dimensions (mm)

								L with ... stages (max. 12)						each add.
Type	**A**	**C1**	**D**	**D1**	**D2**	**E1**	**E2**	**1**	**2**	**3**	**4**	**5**	**6**	**stage**
S606	88	52	84	15	5,5	68	68	64	86	108	130	152	174	22
S608	88	52	88	15	5,5	68	68	71	97	123	149	175	201	26
S612	88	52	88	15	5,5	68	68	77	109	141	173	205	237	32

Base Mounting Switches

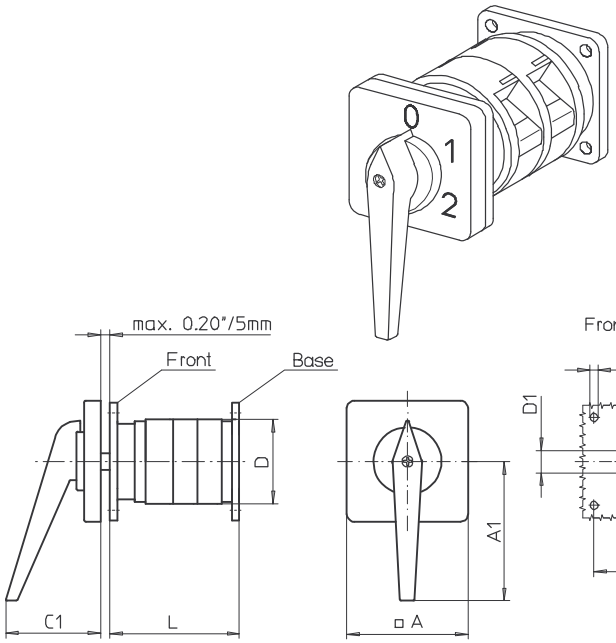

Product line
S600

Base mounting switch

Base/front mounting

Four hole mounting
68 x 68 mm front
68 x 68 mm base

G-operator module
88 x 88 mm escutcheon

002G1

Complete switch	**Poles**	**Product lines**	**Rated data** (IEC 60947) Operational current I_e AC-21A A	Operational power at 380–440 V AC-23A kW	AC-3 kW	**Order code number**
Rotary Cam Switches Switching angle 30°/45°/60°/90°	1 ... 24	S600	80 100 160	45 55 75	30 37 45	**S606 - 61 ... - 002G1** **S608 - 61 ... - 002G1** **S612 - 61 ... - 002G1**

SMD modules for basic switch (A33)

Mounting form module for 002G1	S600	**BFA6 - 002**
G-operator module 88 x 88 mm, mounting form 002G1 Starting position of the handle 09h Escutcheon black, handle black		**6AG1**
G-operator module 88 x 88 mm, mounting form 002G1 Starting position of the handle 12h Escutcheon black, handle black		**6BG1**
Legend plate silver, operator module 002G1		**FAS6 - ....** (FA number)

Dimensions (mm)

Type	**A**	**A1**	**C1**	**D**	**D1**	**D2**	**E1**	**E2**	L with ... stages (max. 12) **1**	**2**	**3**	**4**	**5**	**each add. stage**
S606	88	86	66	84	15	5,5	68	68	64	86	108	130	152	22
S608	88	86	66	88	15	5,5	68	68	71	97	123	149	175	26
S612	88	86	66	88	15	5,5	68	68	77	109	141	173	205	32

Base Mounting Switches

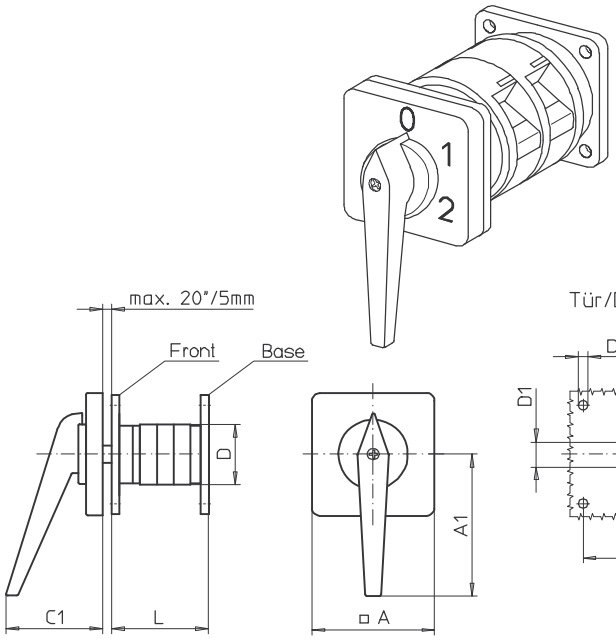

Product line
S600

Base mounting switch
operator module of next size
Base/front mounting

Four hole mounting
104 x 104 mm front
104 x 104 mm base

G-operator module
130 x130 mm escutcheon

012G1

Complete switch	Poles	Product lines	Rated data (IEC 60947) Operational current I_e AC-21A A	Operational power at 380–440 V AC-23A kW	AC-3 kW	Order code number
Rotary Cam Switches Switching angle 30°/45°/60°/90°	1 ... 24	S600	80 100 160	45 55 75	30 37 45	**S606 - 61 ... - 012G1** **S608 - 61 ... - 012G1** **S612 - 61 ... - 012G1**

SMD modules for basic switch (A33)

Mounting form module for 012G1	S600	**BFA6 - 012**
G-operator module 88 x 88 mm, mounting form 012G1 Starting position of the handle 09h Escutcheon black, handle black		**8CG1**
G-operator module 88 x 88 mm, mounting form 012G1 Starting position of the handle 12h Escutcheon black, handle black		**8DG1**
Legend plate silver, operator module 012G1		**FAS8 - ....** (FA number)

Dimensions (mm)

Type	A	A1	C1	D	D1	D2	E1/E2	L with ... stages (max. 12) 1	2	3	4	5	6	each add. stage
S606	130	117	74	84	20	5,5	104	70	92	114	136	158	180	22
S608	130	117	74	88	20	5,5	104	77	103	129	155	181	207	26
S612	130	117	74	88	20	5,5	104	83	115	147	179	211	243	32

Base Mounting Switches

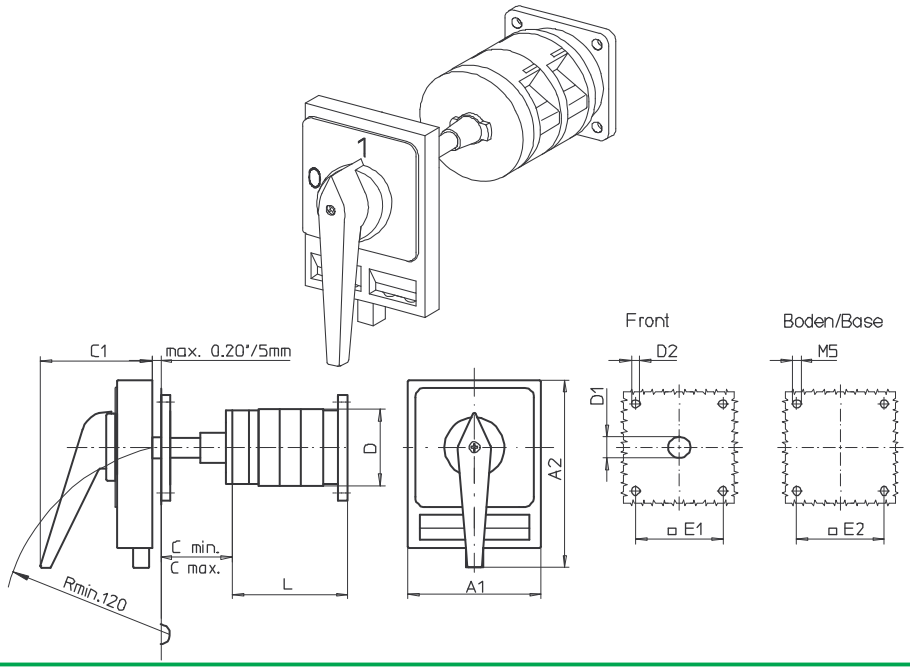

Product line
S600

Base mounting switch

Door clutch

Base mounting
68 x 68 mm base

H-padlock device
98 x 142 mm

040H1 (IP55)

Complete switch	Poles	Product lines	Rated data (IEC 60947) Operational current I_e AC-21A A	Operational power at 380–440 V AC-23A kW	AC-3 kW	Order code number
Rotary Cam Switches	1 ... 24	S600	80	45	30	**S606 - 61 ... - 040H1**
Switching angle 90°			100	55	37	**S608 - 61 ... - 040H1**
padlockable 09h/12h/03h/06h			160	75	45	**S612 - 61 ... - 040H1**

SMD modules for basic switch (A33)

Mounting form module for 041M1	S600	**BFA6 - 041**
H-padlock device 98 x 142 mm, mounting form 040H1 Starting position of the handle 09h Escutcheon black, handle black		**6CH1-99**
H-padlock device 98 x 142 mm, mounting form 040H1 Starting position of the handle 12h Escutcheon black, handle black		**6EH1-99**
Legend plate silver, operator module 040H1		**FAS6 - ....** (FA number)

Dimensions (mm)

Type	A1	A2	C_{min}	C_{max}	C1	D	D1	D2	E1	E2	L with ... stages (max. 12) 1	2	each add. stage
S606	98	142	48	60	83	84	18	5,5	68	68	58	80	22
S608	98	142	48	60	83	88	18	5,5	68	68	65	91	26
S612	98	142	48	60	83	88	18	5,5	68	68	71	103	32

Base Mounting Switches

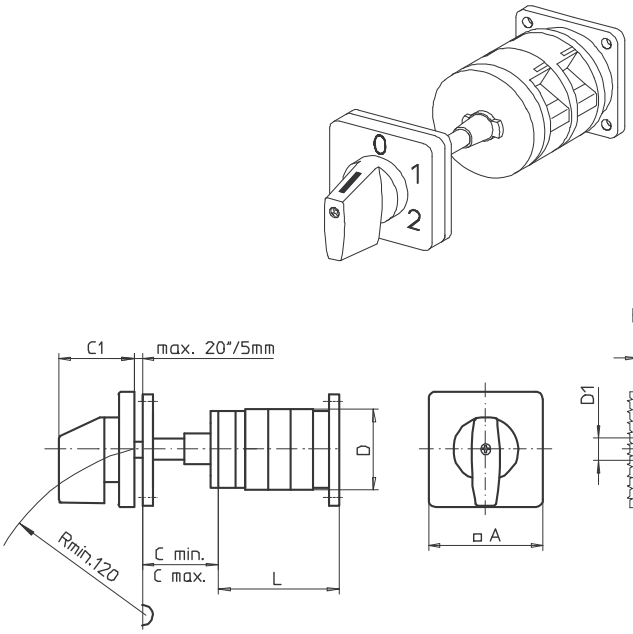

Product line
S600

Base mounting switch

Door clutch

Base mounting
68 x 68 mm base

M-operator module
88 x 88 mm escutcheon

041M1 (IP55)

Complete switch	Poles	Product lines	Rated data (IEC 60947) Operational current I_e AC-21A A	Operational power at 380–440 V AC-23A kW	AC-3 kW	Order code number
Rotary Cam Switches Switching angle 30°/45°/60°/90°	1 ... 24	S600	80 100 160	45 55 75	30 37 45	**S606 - 61 ... - 041M1** **S608 - 61 ... - 041M1** **S612 - 61 ... - 041M1**

SMD modules for basic switch (A33)

Mounting form module for 041M1	S600	**BFA6 - 041**
M-operator module 88 x 88 mm, mounting form 041M1 Starting position of the handle 09h Escutcheon black, handle black		**6AM1**
M-operator module 88 x 88 mm, mounting form 041M1 Starting position of the handle 12h Escutcheon black, handle black		**6BM1**
Legend plate silver, operator module 041M1		**FAS6 - ....** (FA number)

Dimensions (mm)

Type	A	C_{min}	C_{max}	C1	D	D1	D2	E1	E2	L with ... stages (max. 12) 1	2	3	each add. stage
S606	88	48	60	52	84	18	5,5	68	68	58	80	107	22
S608	88	48	60	52	88	18	5,5	68	68	65	91	117	26
S612	88	48	60	52	88	18	5,5	68	68	71	103	135	32

Base Mounting Switches

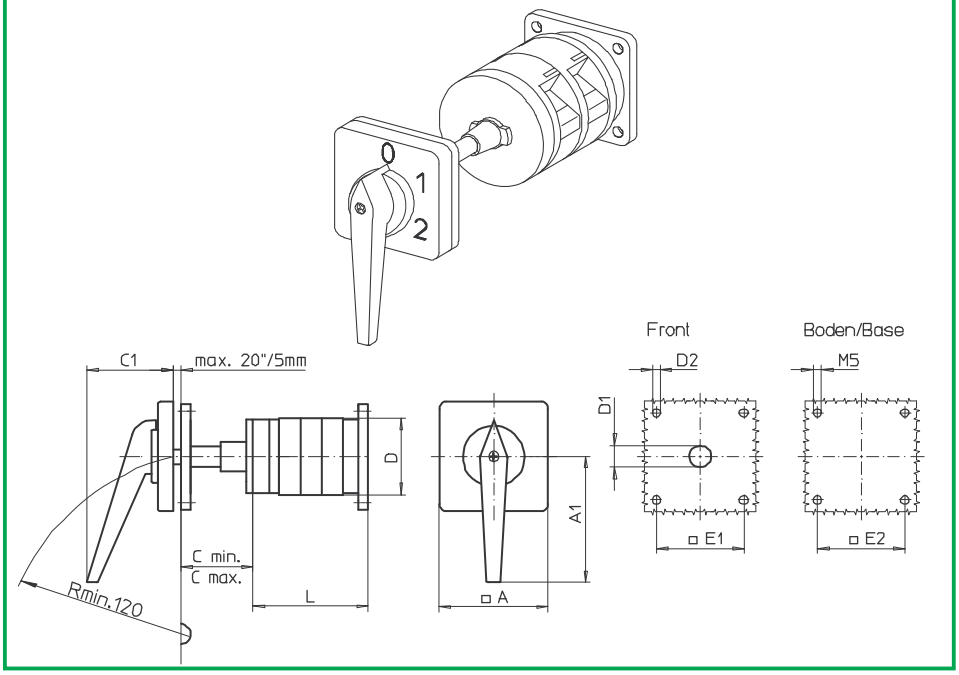

Product line
S600

Base mounting switch

Door clutch

Base mounting
68 x 68 mm base

G-operator module
88 x 88 mm escutcheon

041G1 (IP55)

Complete switch	Poles	Product lines	Rated data (IEC 60947) Operational current I_e AC-21A A	Operational power at 380–440 V AC-23A kW	AC-3 kW	Order code number
Rotary Cam Switches Switching angle 30°/45°/60°/90°	1 ... 24	S600	80 100 160	45 55 75	30 37 45	**S606 - 61 ... - 041G1** **S608 - 61 ... - 041G1** **S612 - 61 ... - 041G1**

SMD modules for basic switch (A33)

Mounting form module for 041G1	S600	**BFA6 - 041**
G-operator module 88 x 88 mm, mounting form 041G1 Starting position of the handle 09h Escutcheon black, handle black		**6AG1**
G-operator module 88 x 88 mm, mounting form 041G1 Starting position of the handle 12h Escutcheon black, handle black		**6BG1**
Legend plate silver, operator module 041G1		**FAS6 - ....** (FA number)

Dimensions (mm)

Type	A	C_{min}	C_{max}	C1	D	D1	D2	E1	E2	L with ... stages (max. 12) 1	2	3	each add. stage
S606	88	48	60	66	84	18	5,5	68	68	58	80	107	22
S608	88	48	60	66	88	18	5,5	68	68	65	91	117	26
S612	88	48	60	66	88	18	5,5	68	68	71	103	135	32

Base Mounting Switches

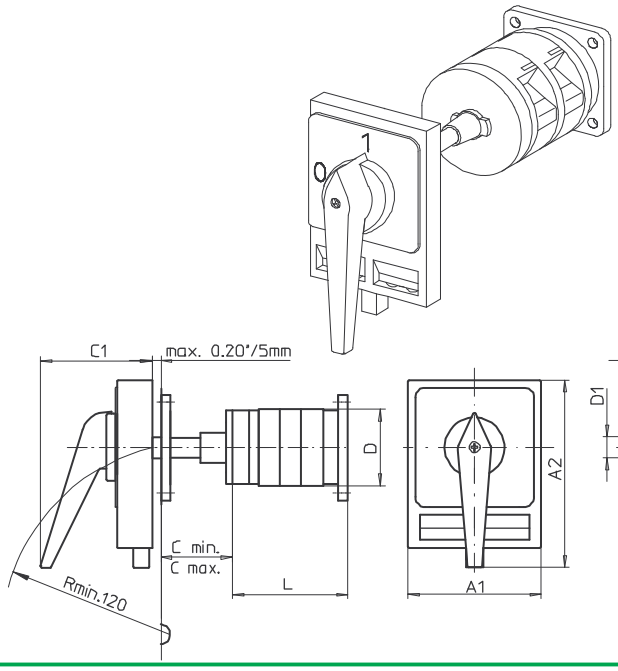

Product line
S600

Base mounting switch

Door clutch

Base mounting
68 x 68 mm base

H-padlock device
98 x 142 mm

041H1 (IP55)

Complete switch	Poles	Product lines	Rated data (IEC 60947) Operational current I_e AC-21A A	Operational power at 380–440 V AC-23A kW	AC-3 kW	Order code number
Rotary Cam Switches	1 ... 24	S600	80	45	30	**S606 - 61 ... - 041H1**
Switching angle 90°			100	55	37	**S608 - 61 ... - 041H1**
padlockable 12h			160	75	45	**S612 - 61 ... - 041H1**

SMD modules for basic switch (A33)

Mounting form module for 041H1	S600	**BFA6 - 041**
H-padlock device 98 x 142 mm, mounting form 041H1 Starting position of the handle 09h Escutcheon black, handle black		**6CH1-12**
H-padlock device 98 x 142 mm, mounting form 041H1 Starting position of the handle 12h Escutcheon black, handle black		**6EH1-12**
Legend plate silver, operator module 041H1		**FAS6 - ....** (FA number)

Dimensions (mm)

Type	A1	A2	C_{min}	C_{max}	C1	D	D1	D2	E1	E2	L with ... stages (max. 12) 1	2	each add. stage
S606	98	142	48	60	83	84	18	5,5	68	68	58	80	22
S608	98	142	48	60	83	88	18	5,5	68	68	65	91	26
S612	98	142	48	60	83	88	18	5,5	68	68	71	103	32

Base Mounting Switches

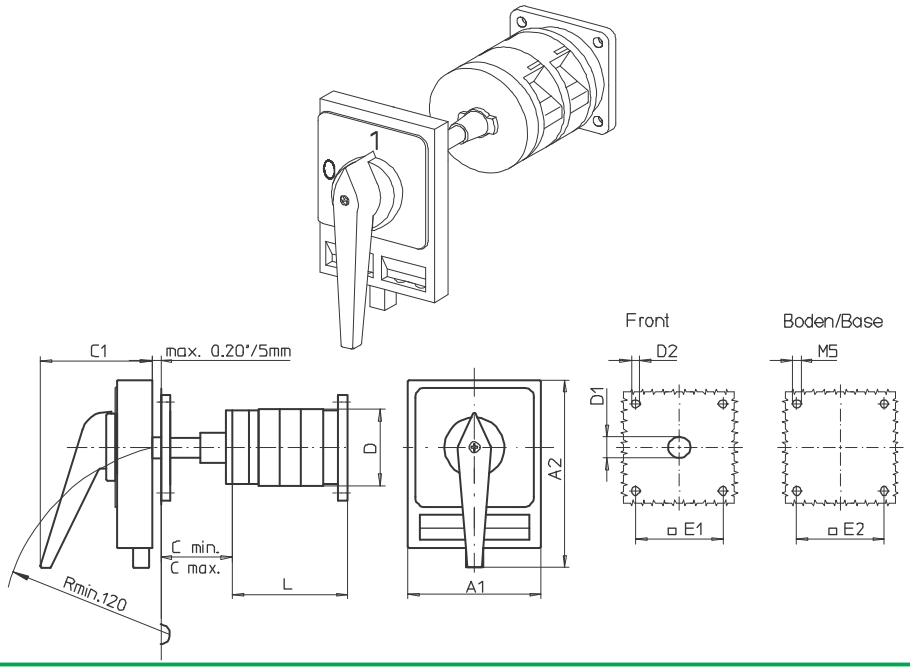

Product line
S600

Base mounting switch

Door clutch

Base mounting
68 x 68 mm base

H-padlock device
98 x 142 mm

044H1 (IP55)
044H4 (IP55)

Complete switch	Poles	Product lines	Rated data (IEC 60947) Operational current I_e AC-21A A	Operational power at 380–440 V AC-23A kW	AC-3 kW	Order code number
Rotary Cam Switches Switching angle 90° padlockable 09h	1 ... 24	S600	80	45	30	**S606 - 61 ... - 044H1**
			100	55	37	**S608 - 61 ... - 044H1**
			160	75	45	**S612 - 61 ... - 044H1**
	1 ... 24	S600	80	45	30	**S606 - 61 ... - 044H4**
			100	55	37	**S608 - 61 ... - 044H4**
			160	75	45	**S612 - 61 ... - 044H4**

SMD modules for basic switch (A33)

Mounting form module for 044H1/044H4	S600	**BFA6 - 041**
H-padlock device 98 x 142 mm, mounting form 044H1 Starting position of the handle 09h, Escutcheon black, handle black		**6CH1-09**
H-padlock device 98 x 142 mm, mounting form 044H4 Starting position of the handle 09h, Escutcheon black, handle red		**6CH4-09**
Legend plate silver, operator module 044H1		**FAS6 - ....** (FA number)
Legend plate yellow, operator module 044H4		**FBS6 - ....** (FA number)

Dimensions (mm)

Type	A1	A2	C_{min}	C_{max}	C1	D	D1	D2	E1	E2	L with ... stages (max. 12) 1	2	each add. stage
S606	98	142	48	60	83	84	18	5,5	68	68	58	80	22
S608	98	142	48	60	83	88	18	5,5	68	68	65	91	26
S612	98	142	48	60	83	88	18	5,5	68	68	71	103	32

Base Mounting Switches

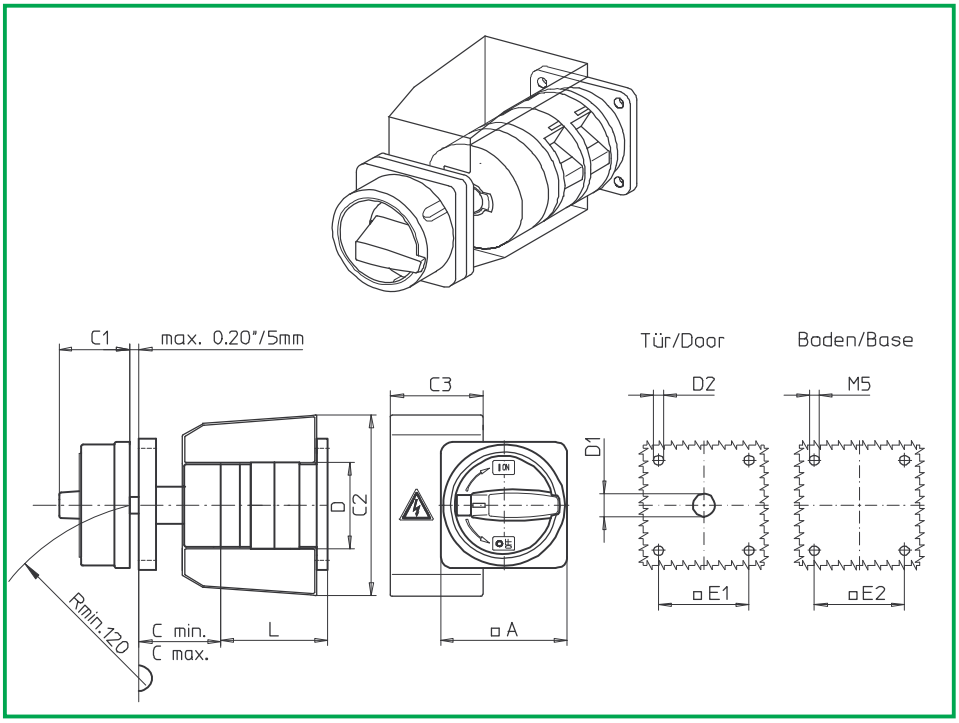

Product line
S600

Base mounting switch

Door clutch with door interlock

Base mounting
68 x 68 mm base

M-padlock device
88 x 88 mm

034M1 (IP55)
034M4 (IP55)

Complete switch	Poles	Product lines	Rated data (IEC 60947) Operational current I_e AC-21A A	Operational power at 380–440 V AC-23A kW	AC-3 kW	Order code number
Main Switches	3 ... 8	S600	80	45	30	**S606 - 61 ... - 034M1**
Switching angle 90°			100	55	37	**S608 - 61 ... - 034M1**
OFF position padlockable 09h			160	75	45	**S612 - 61 ... - 034M1**
Main/Emergency-Off Switches	3 ... 8	S600	80	45	30	**S606 - 61 ... - 034M4**
Switching angle 90°			100	55	37	**S608 - 61 ... - 034M4**
OFF position padlockable 09h			160	75	45	**S612 - 61 ... - 034M4**

SMD modules for basic switch (A33)

Mounting form module for 034M.	S600	**BFA6 - 042**	
M-padlock device 88 x 88 mm, mounting form 034M1 Escutcheon black, padlockable handle black		**6KM1**	
M-padlock device 88 x 88 mm, mounting form 034M4 Escutcheon yellow, padlockable handle red		**6KM4**	
Additional legend plate		**FAZ2-8041**	
		S606,S608	S612
Terminal cover	2 contact stages	**TCA6**	**TCC6**

Dimensions (mm)

Type	A	C_{min}	C_{max}	C1	D	D1	D2	E1	E2	L with ... stages (max. 4) 1	2	3	each add. stage
S606	88	48	60	50	84	18	5,5	68	68	58	80	107	22
S608	88	48	60	50	88	18	5,5	68	68	65	91	117	26
S612	88	48	60	50	88	18	5,5	68	68	71	103	135	32

Base Mounting Switches

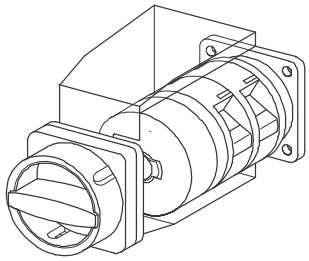

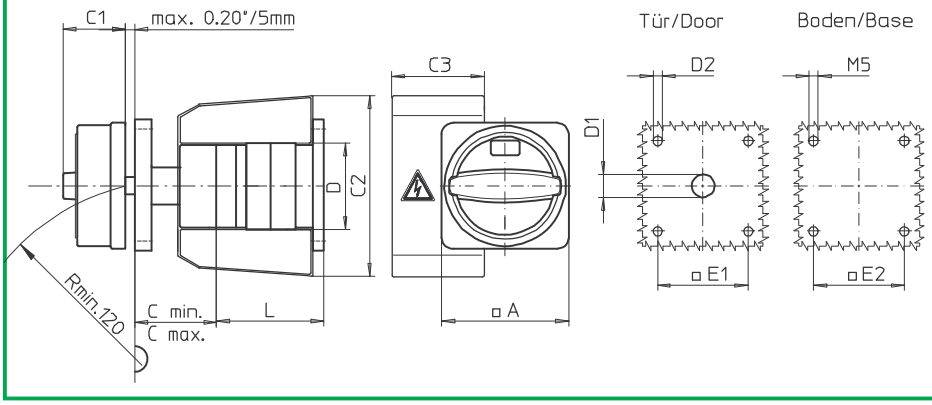

Product line
S600

Base mounting switch

Door clutch with door interlock

Base mounting
68 x 68 mm base

N-padlock device
88 x 88 mm

034N1 (IP55)
034N4 (IP55)

Complete switch	**Poles**	**Product lines**	**Rated data** (IEC 60947) Operational current I_e AC-21A A	Operational power at 380–440 V AC-23A kW	AC-3 kW	**Order code number**
Main Switches	3 ... 8	S600	80	45	30	**S606 - 61 ... - 034N1**
Switching angle 90°			100	55	37	**S608 - 61 ... - 034N1**
OFF position padlockable 09h			160	75	45	**S612 - 61 ... - 034N1**
Main/Emergency-Off Switches	3 ... 8	S600	80	45	30	**S606 - 61 ... - 034N4**
Switching angle 90°			100	55	37	**S608 - 61 ... - 034N4**
OFF position padlockable 09h			160	75	45	**S612 - 61 ... - 034N4**

SMD modules for basic switch (A33)

Mounting form module for 034N.	S600	**BFA6 - 042**	
N-padlock device 88 x 88 mm, mounting form 034N1 Escutcheon black, padlockable handle black		**6KN1**	
N-padlock device 88 x 88 mm, mounting form 034N4 Escutcheon yellow, padlockable handle red		**6KN4**	
Additional legend plate		**FAZ2-8041**	
		S606,S608	S612
Terminal cover	2 contact stages	**TCA6**	**TCC6**

Dimensions (mm)

Type	**A**	**Cmin**	**Cmax**	**C1**	**C2**	**C3**	**D**	**D1**	**D2**	**E1**	**E2**	L with ... stages (max. 4) **1**	**2**	**each add. stage**
S606	88	48	60	45	125	89	84	18	5,5	68	68	58	80	22
S608	88	48	60	45	125	89	88	18	5,5	68	68	65	91	26
S612	88	48	60	45	125	89	88	18	5,5	68	68	71	103	32

Base Mounting Switches

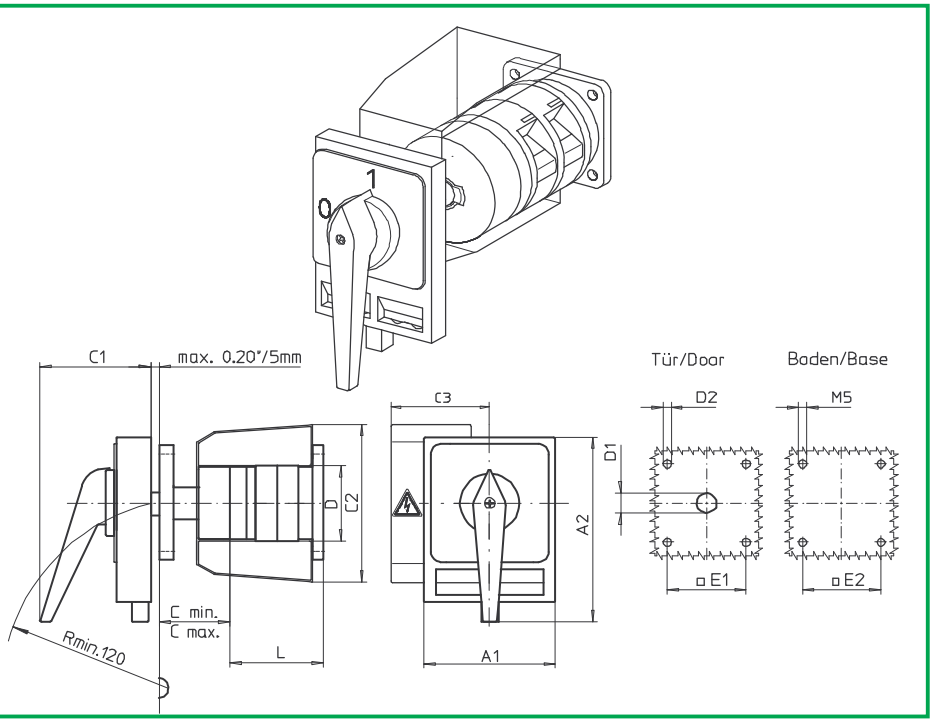

Product line
S600

Base mounting switch

Door clutch with door interlock

Base mounting
68 x 68 mm base

H-padlock device
98 x 142 mm

034H1 (IP55)
034H4 (IP55)

Complete switch	Poles	Product lines	Rated data (IEC 60947) Operational current I_e AC-21A A	Operational power at 380–440 V AC-23A kW	AC-3 kW	Order code number
Main Switches	3 ... 8	S600	80	45	30	**S606 - 61 ... - 034H1**
Switching angle 90°			100	55	37	**S608 - 61 ... - 034H1**
OFF position padlockable 09h			160	75	45	**S612 - 61 ... - 034H1**
Main/Emergency-Off Switches	3 ... 8	S600	80	45	30	**S606 - 61 ... - 034H4**
Switching angle 90°			100	55	37	**S608 - 61 ... - 034H4**
OFF position padlockable 09h			160	75	45	**S612 - 61 ... - 034H4**

SMD modules for basic switch (A33)

Mounting form module for 034H.	S600	**BFA6 - 042**
H-padlock device black, mounting form 034H1 Starting position of the handle 09h, H-handle black		**6CH1-09**
H-padlock device black, mounting form 034H4 Starting position of the handle 09h, H-handle red		**6CH4-09**
Legend plate silver, mounting form 034H1		**FAS6 - ....** (FA number)
Legend plate yellow, mounting form 034H4		**FBS6 - ....** (FA number)
Additional legend plate		**FAZ2-8041**
Terminal cover	2 contact stages	S606,S608 **TCA6** / S612 **TCC6**

Dimensions (mm)

Type	A1	A2	Cmin	Cmax	C1	C2	C3	D	D1	D2	E1/E2	L with ... stages (max. 4) 1	2	each add. stage
S606	98	142	48	60	83	125	89	84	18	5,5	68	58	80	22
S608	98	142	48	60	83	125	89	88	18	5,5	68	65	91	26
S612	98	142	48	60	83	125	89	88	18	5,5	68	71	103	32

Base Mounting Switches

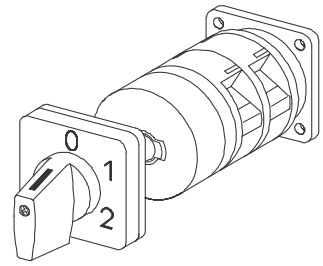

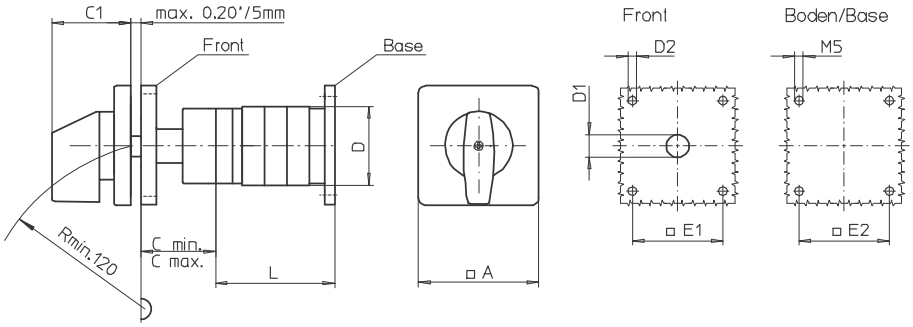

Product line
S600

Base mounting switch

Door clutch with door interlock

Base mounting
68 x 68 mm base

M-operator module
88 x 88 mm escutcheon

042M1 (IP55)

Complete switch	Poles	Product lines	Rated data (IEC 60947) Operational current I_e AC-21A A	Operational power at 380–440 V AC-23A kW	AC-3 kW	Order code number
Rotary Cam Switches Switching angle 30°/45°/60°/90°	1 ... 24	S600	80 100 160	45 55 75	30 37 45	**S606 - 61 ... - 042M1** **S608 - 61 ... - 042M1** **S612 - 61 ... - 042M1**

SMD modules for basic switch (A33)

Mounting form module for 042M1	S600	**BFA6 - 042**
M-operator module 88 x 88 mm, mounting form 042M1 Starting position of the handle 09h Escutcheon black, handle black		**6AM1**
M-operator module 88 x 88 mm, mounting form 042M1 Starting position of the handle 12h Escutcheon black, handle black		**6BM1**
Legend plate silver, operator module 042M1		**FAS6 - ....** (FA number)

Dimensions (mm)

Type	A	C_{min}	C_{max}	C1	D	D1	D2	E1	E2	L with ... stages (max. 12) 1	2	3	each add. stage
S606	88	48	60	52	84	18	5,5	68	68	58	80	107	22
S608	88	48	60	52	88	18	5,5	68	68	65	91	117	26
S612	88	48	60	52	88	18	5,5	68	68	71	103	135	32

Base Mounting Switches

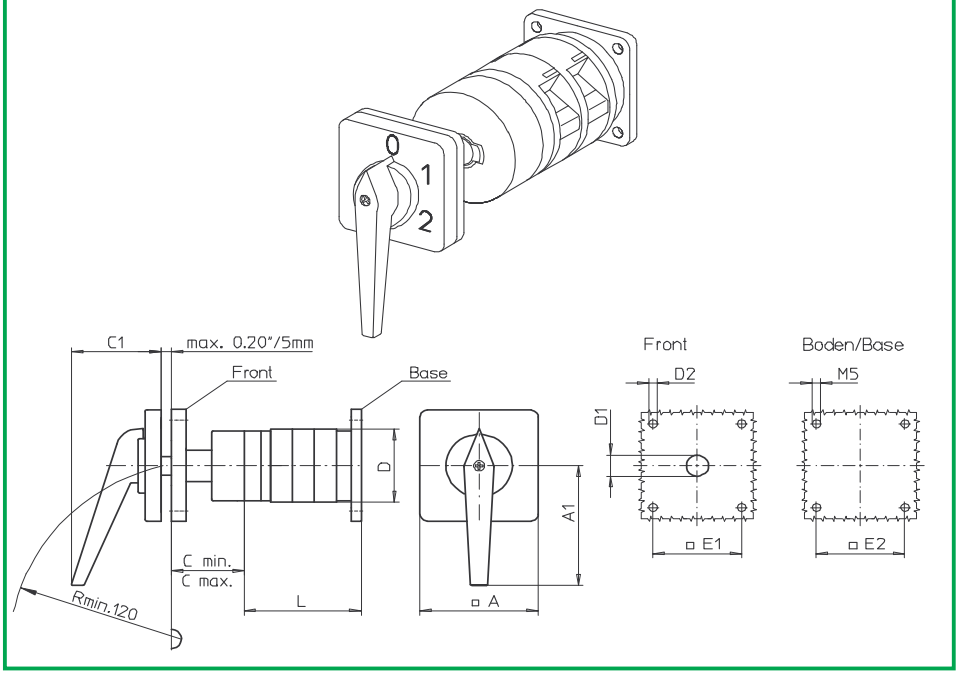

Product line
S600

Base mounting switch

Door clutch with door interlock

Base mounting
68 x 68 mm base

G-operator module
88 x 88 mm escutcheon

042G1 (IP55)

Complete switch	Poles	Product lines	Rated data (IEC 60947) Operational current I_e AC-21A A	Operational power at 380–440 V AC-23A kW	AC-3 kW	Order code number
Rotary Cam Switches Switching angle 30°/45°/60°/90°	1 ... 24	S600	80 100 160	45 55 75	30 37 45	**S606 - 61 ... - 042G1** **S608 - 61 ... - 042G1** **S612 - 61 ... - 042G1**

SMD modules for basic switch (A33)

Mounting form module for 042G1	S600	**BFA6 - 042**
G-operator module 88 x 88 mm, mounting form 042G1 Starting position of the handle 09h Escutcheon black, handle black		**6AG1**
G-operator module 88 x 88 mm, mounting form 042G1 Starting position of the handle 12h Escutcheon black, handle black		**6BG1**
Legend plate silver, operator module 042G1		**FAS6 - ....** (FA number)

Dimensions (mm)

Type	A	A1	C_{min}	C_{max}	C1	D	D1	D2	E1	E2	L with ... stages (max. 12) 1	2	each add. stage
S606	88	86	48	60	66	84	18	5,5	68	68	58	80	22
S608	88	86	48	60	66	88	18	5,5	68	68	65	91	26
S612	88	86	48	60	66	88	18	5,5	68	68	71	103	32

Base Mounting Switches

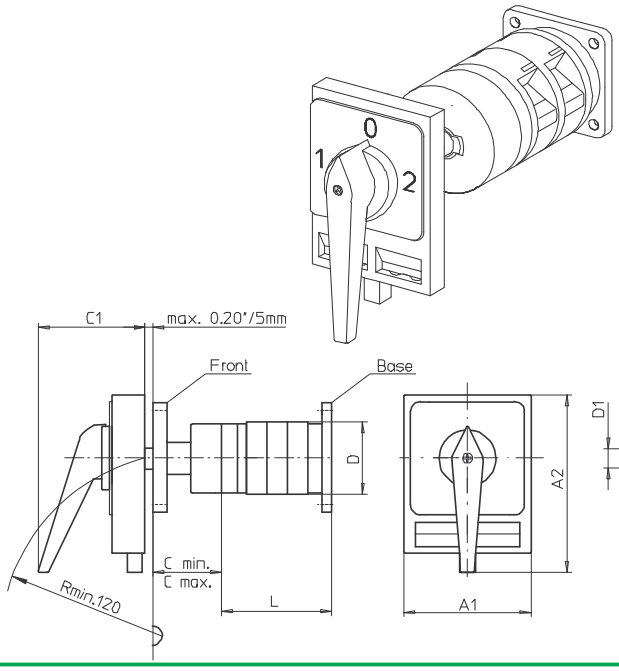

Product line
S600

Base mounting switch

Door clutch with door interlock

Base mounting
68 x 68 mm base

H-padlock device
98 x 142 mm

042H1 (IP55)

Complete switch	Poles	Product lines	Rated data (IEC 60947) Operational current I_e AC-21A A	Operational power at 380–440 V AC-23A kW	AC-3 kW	Order code number
Rotary Cam Switches	1 ... 24	S600	80	45	30	**S606 - 61 ... - 042H1**
Switching angle 90°			100	55	37	**S608 - 61 ... - 042H1**
padlockable 12h			160	75	45	**S612 - 61 ... - 042H1**

SMD modules for basic switch (A33)

Mounting form module for 042H1	S600	**BFA6 - 042**
H-padlock device 98 x 142 mm, mounting form 042H1 Starting position of the handle 09h Escutcheon black, handle black		**6CH1-12**
H-padlock device 98 x 142 mm, mounting form 042H1 Starting position of the handle 12h Escutcheon black, handle black		**6EH1-12**
Legend plate silver, operator module 042H1		**FAS6 - ....** (FA number)

Dimensions (mm)

Type	A1	A2	C_{min}	C_{max}	C1	D	D1	D2	E1	E2	L with ... stages (max. 12) 1	2	each add. stage
S606	98	142	48	60	83	84	18	5,5	68	68	58	80	22
S608	98	142	48	60	83	88	18	5,5	68	68	65	91	26
S612	98	142	48	60	83	88	18	5,5	68	68	71	103	32

Base Mounting Switches

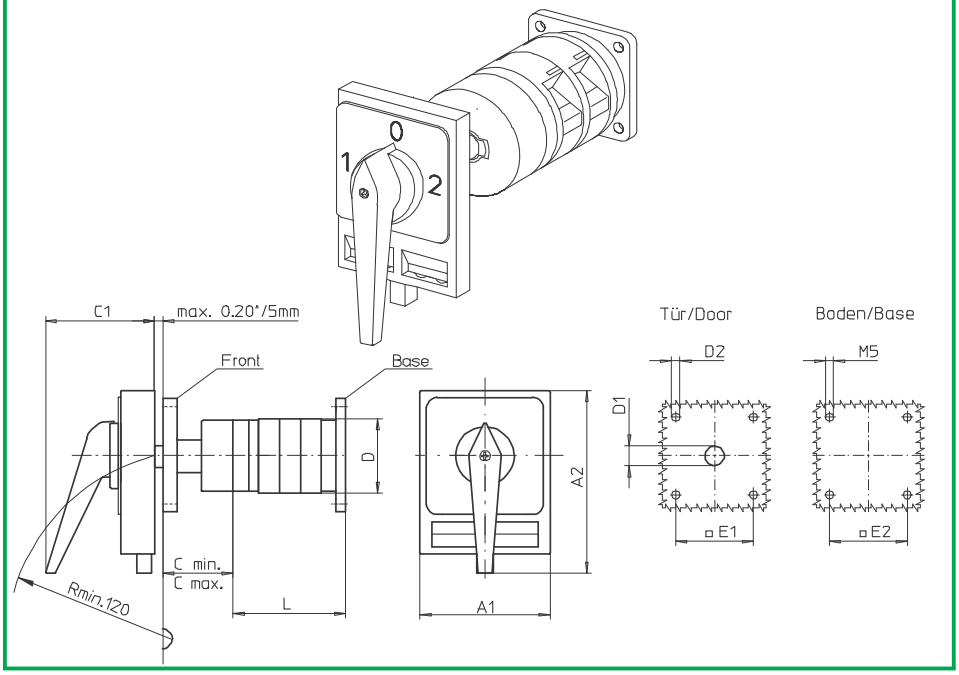

Product line
S600

Base mounting switch

Door clutch with door interlock

Base mounting
68 x 68 mm base

H-padlock device
98 x 142 mm

043H1 (IP55)

Complete switch	Poles	Product lines	Rated data (IEC 60947) Operational current I_e AC-21A A	Operational power at 380–440 V AC-23A kW	AC-3 kW	Order code number
Rotary Cam Switches	1 ... 24	S600	80	45	30	**S606 - 61 ... - 043H1**
Switching angle 90°			100	55	37	**S608 - 61 ... - 043H1**
padlockable 09h/12h/03h/06h			160	75	45	**S612 - 61 ... - 043H1**

SMD modules for basic switch (A33)

Mounting form module for 043H1	S600	**BFA6 - 042**
H-padlock device 98 x 142 mm, mounting form 043H1 Starting position of the handle 09h Escutcheon black, handle black		**6CH1-99**
H-padlock device 98 x 142 mm, mounting form 043H1 Starting position of the handle 12h Escutcheon black, handle black		**6EH1-99**
Legend plate silver, operator module 043H1		**FAS6 - ....** (FA number)

Dimensions (mm)

Type	A1	A2	C_{min}	C_{max}	C1	D	D1	D2	E1	E2	L with ... stages (max. 12) 1	2	each add. stage
S606	98	142	48	60	83	84	18	5,5	68	68	58	80	22
S608	98	142	48	60	83	88	18	5,5	68	68	65	91	26
S612	98	142	48	60	83	88	18	5,5	68	68	71	103	32

SMD Sälzer Modular Design

Faster deliveries through SMD

In order to ensure even greater flexibility for worldwide supply availability within 24h, Sälzer Electric has introduced the SMD (Sälzer Modular Design) system.

SMD modules are individually prefabricated and tested all-in-one modules which SMD Service holds in stock in sufficient quantities. From basic switch modules, mounting form modules and operator modules, SMD Service can assemble a complete switch requested by the customer and pack it ready for delivery in just a few actions.

– back –